MARIN COUNTY, CALIFORNIA

CONTRACT DOCUMENTS FOR

BIOSOLIDS LAND APPLICATION SERVICES 2024

JOB NO. 24580-01
APRIL 2024

DISTRICT BOARD

Craig K. Murray – President
Gary E. Robards – Vice President
Megan Clark
Crystal J. Yezman

Curtis Paxton – General Manager
Michael P. Cortez, PE – District Engineer
Mel Liebmann – Plant Manager
Dale McDonald – Administrative Services Manager
Greg Pease – Collection System/Safety Manager

Copy No. _____

THIS PAGE INTENTIONALLY LEFT BLANK

ACKNOWLEDGEMENT

ACKNOWLEDGEMENT OF THE CONTRACT DOCUMENTS MUST BE RECEIVED BY THE DISTRICT IN ORDER FOR YOU TO RECEIVE ADDENDUMS (i.e., updates or changes to the Contract Documents). PLEASE COMPLETE BELOW AND FAX TO 415-499-7715, OR EMAIL TO pquinn@lgvsd.org IMMEDIATELY UPON RECEIPT OF THIS PACKET so that you will receive any changes or updates as they occur. If we do not receive this form from you, any updates or changes that you do not receive are not the responsibility of the District.

BID ITEM: BIOSOLIDS LAND APPLICATION SERVICES 2024

Date Received: _____

Recipient: _____ (BIDDER)

_____ (ADDRESS)

_____

_____

_____ (PHONE)

_____ (FAX)

_____ (EMAIL)

_____ _____

Printed Name Signature

THIS PAGE INTENTIONALLY LEFT BLANK

CERTIFICATIONS PAGE

The various portions of the specifications and other contract documents for project "BIOSOLIDS LAND APPLICATION SERVICES 2024," JOB NO. 24580-01, have been prepared under the direction of the following design professionals, licensed in the State of California.

LGVSD:

Responsible for the following Specification sections:

<u>All, except as noted below</u>

GHD Inc.:

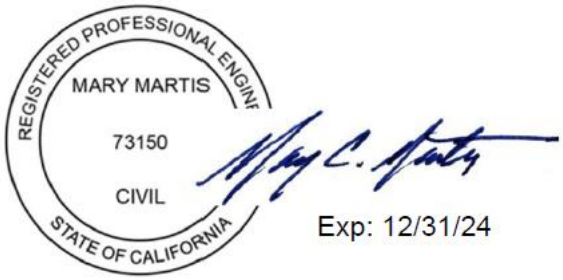

Mary Martis, PE
Lic. No. C73150

Responsible for the following sections:

<u>Volume 3 – Technical Specifications</u>

<u>Volume 4 – Figures</u>

THIS PAGE INTENTIONALLY LEFT BLANK

TABLE OF CONTENTS

VOLUME 1 – CONTRACT REQUIREMENTS

NOTICE INVITING SEALED BIDS 1-1
INSTRUCTIONS TO BIDDERS 1-5
CONTRACT CHECK LIST 1-15
AGREEMENT 1-17
GENERAL CONDITIONS 1-21
PERFORMANCE BOND 1-67
PAYMENT/LABOR AND MATERIALS BOND 1-69
ESCROW AGREEMENT FOR
SECURITY DEPOSITS IN LIEU OF RETENTION 1-71

VOLUME 2 – BID DOCUMENTS

BIDDER'S CHECK LIST 2-1
BID LABEL 2-3
PROPOSAL COVER PAGE AND BID SCHEDULE 2-5
ADDENDUM ACKNOWLEDGEMENT 2-5
BID SCHEDULE 2-6
BID BOND 2-13
CONTRACTOR LICENSE INFORMATION 2-15
LIST OF PROPOSED SUBCONTRACTORS 2-17
LIST OF MAJOR MATERIALS 2-19
WORKERS COMPENSATION INSURANCE CERTIFICATION 2-21
NON-COLLUSION AFFIDAVIT 2-23
DRUG-FREE WORKPLACE CERTIFICATION 2-25
DEBARMENT CERTIFICATION 2-27
STATEMENT OF EXPERIENCE OF BIDDER 2-29
FINANCIAL QUALIFICATIONS 2-37
BIDDER'S REFERENCES AND CREDIT REPORT 2-37
FINANCIAL STATEMENT FORM 2-38
SITE VISIT AFFIDAVIT TO BE EXECUTED
BY BIDDER, NOTARIZED AND SUBMITTED WITH BID 2-41
BIDDER'S SIGNATURE PAGE 2-43

APPENDIX A: ..... DISTRICT SAFE WORK REQUIREMENTS
APPENDIX B: ..... INSURANCE ENDORSEMENT FORMS
APPENDIX C: ..... DIR FORM PWC-100 SUPPLEMENTAL QUESTIONNAIRE
APPENDIX D: ..... MISCELLANEOUS CONTRACT FORMS
APPENDIX E: ..... LABOR COMPLIANCE PROGRAM
APPENDIX F: ..... MISCELLANEOUS PERMITS
LAS GALLINAS VALLEY SANITARY DISTRICT, MARIN COUNTY – ENROLLMENT UNDER GENERAL WASTE DISCHARGE REQUIREMENTS FOR THE DISCHARGE OF BIOSOLIDS TO LAND FOR USE AS A SOIL AMENDMENT IN AGRICULTURAL ACTIVITIES, ORDER NO. 2004-0012-DWQ
APPENDIX G: ..... AS-BUILT DRAWINGS FOR SLUDGE STORAGE LAGOONS
APPENDIX H: ..... EXAMPLE METHODOLOGY FOR DETERMINATION OF THE TOTAL SOLIDS CONTENT OF THE LIQUID BIOSOLIDS MATERIAL

VOLUME 3 – TECHNICAL SPECIFICATIONS

DIVISION 1

SUMMARY OF WORK.....SECTION 01 10 00
COORDINATION AND SITE CONDITIONS.....SECTION 01 14 00
ADMINISTRATIVE REQUIREMENTS.....SECTION 01 30 00
SUBMITTALS.....SECTION 01 33 00
QUALITY REQUIREMENTS.....SECTION 01 40 00
CONSTRUCTION FACILITIES AND TEMPORARY CONTROLS.....SECTION 01 50 00
PRODUCT REQUIREMENTS.....SECTION 01 60 00
CONTRACT CLOSEOUT.....SECTION 01 70 00
SAFETY AND HEALTH.....SECTION 01 95 00

VOLUME 4 – FIGURES

PROJECT FIGURES

VOLUME 1
CONTRACT REQUIREMENTS

THIS PAGE INTENTIONALLY LEFT BLANK

LAS GALLINAS VALLEY SANITARY DISTRICT
101 Lucas Valley Road, Suite 300
San Rafael, California 94903

NOTICE INVITING SEALED BIDS

1. The Las Gallinas Valley Sanitary District hereby invites bids for the BIOSOLIDS LAND APPLICATION SERVICES 2024, in accordance with California Public Contract Code Section 20804 and other applicable law, and the following:

2. All bids must be delivered to the **Engineering Department, Las Gallinas Valley Sanitary District, 101 Lucas Valley Road, Suite 300, San Rafael, California 94903** on or before **11:00 AM, June 6, 2024**. Bids will be opened and read publicly at that time. Bids must be made on the bid forms included in the bid package. Bids that are submitted late according to the official time kept by the District Engineer or a designee will be returned unopened. Bids submitted by facsimile or other electronic means will not be accepted. Bids that are incomplete or that otherwise do not conform to the requirements specified in the bid package may be deemed non-responsive.

3. A pre-bid meeting is scheduled for **May 9, 2024 at 1:00 PM, 300 Smith Ranch Road, San Rafael, CA 94903**. The pre-bid meeting is **not mandatory**. **Please call 415-472-1734 or email pquinn@lgvsd.org to RSVP.** In addition, this Project requires Bidders to submit a notarized copy of a Site Visit Affidavit to be submitted with the Bid. See required form under Bidding Requirements section of the Contract Documents. A site visit will follow after the pre-bid meeting. Special site visits may be scheduled 24 hours in advance a minimum of five (5) working days before bid opening.

4. The project Contractor shall furnish all tools, equipment, apparatus, facilities, labor and material necessary to perform and complete in a good and workmanlike manner the BIOSOLIDS LAND APPLICATION SERVICES 2024 project as shown in the bids documents and in accordance with the Contract Documents within **60 calendar days** of the project commencement date specified in the Notice to Proceed for the project.

5. SCOPE OF WORK. The project work is generally described as:
   The Work (i.e., "Project") includes but is not limited to furnishing all labor, materials, and equipment required to extract, contain, transport, convey, weigh, measure, and beneficially reuse the liquid wastewater biosolids removed from the Sludge Storage Ponds, including creation of a Work Plan to perform the Work, as well as all collection, testing, and reporting as needed to comply with the District's biosolids land application permit. The Contractor shall beneficially land apply liquid biosolids on APN 155-011-33 (i.e., Land Application Parcel) in accordance with the California State Water Resources Control Board's General Waste Discharge Requirements (WDRs) for the Discharge of Biosolids to Land for Use in Agricultural, Silvicultural, Horticultural, and Land Reclamation Activities (General Order), included in the District's Notice of Applicability and Monitoring and Reporting Requirements (Order No.: 2004-0012-DWQ; "NOA/MRP"), the applicable permits, state and federal regulatory requirements. In addition, the Contractor shall comply with the following specific Sections of the NOA/MRP:

- NOA Section V, “Site Specific and Other Site Requirements”
- MRP Section V.A., “Biosolids Monitoring, Table 1” (with the exception of any parameter frequency noted in table as once every 5 years)
- MRP Section V.B., “Routine Field Monitoring”
- MRP Section V.C., “Soil Monitoring”

The Work also includes the service of seeding up to 45 acres of the Land Application Parcel (APN 155-011-33) with rye grass. Excess biosolids that cannot be land applied on the Land Application Parcel shall be disposed through subsurface injection on the District’s Dedicated Land Disposal (DLD) Site.

The Work shall include compliance with all required notifications, permits, monitoring, reporting, and record-keeping programs that are required by the Scope of Services and by regulating authorities.

6. All the project work shall be completed in accordance with the bid packages on file at the District. Complete bid packages may be obtained at the **Engineering Department, Las Gallinas Valley Sanitary District, 101 Lucas Valley Road, Suite 300, San Rafael, California 94903.** There will be a fifty dollar ($50) non-refundable charge for each bid package. Checks and money orders must be made payable to the Las Gallinas Valley Sanitary District. Requests for information on receiving bid packages should be directed to the District Offices at (415) 472-1734. Bid packages will be mailed upon request and receipt of the non-refundable charge and the bidder’s UPS or FedEx account number.

7. In accordance with California Public Contract Code Section 20804.5, all bids must be presented under sealed cover and include one of the following forms of bidder’s security: cash, cashier’s check made payable to the District, certified check made payable to the District, or a bidder’s bond. The amount of bidder’s security provided must equal at least ten (10) percent of the total of the bid price for the base bid and the additive or deductive items listed in this notice. The successful bidder must submit to the District complete, executed copies of all documents specified in the contract checklist included in the bid package within seven (7) calendar days of receiving written Notice of Award of the project. Bidder’s security of any successful bidder that fails to do so will be forfeited to the District. The documents required pursuant to the contract checklist include, but are not limited to, a payment or labor and materials bond in an amount of at least 100 percent of the amount payable by the terms of the project contract and that satisfies the requirements of California Civil Code Section 3248, and a performance bond in an amount of at least 100 percent of the amount payable by the terms of the contract. All project bonds must be executed by an admitted surety insurer in accordance with applicable law and acceptable to the District. **The Engineer’s estimate is $300,000.**

8. Pursuant to California Public Contract Code Section 3300, a **Class A General Engineering** California contractor’s license is required to bid on the project. In accordance with California Business and Professions Code Section 7028.15, all project

work must be performed by properly licensed contractors and subcontractors with active licenses in good standing as of the date and time specified for bid opening. However, in accordance with California Public Contract Code Section 20103.5, if the project involves federal funds, project contractors and subcontractors must have active licenses in good standing no later than the time the project contract is awarded. Bids that do not satisfy applicable licensing requirements will be considered non-responsive. Licenses must be issued by the Contractor's State License Board of California and must be maintained in good standing throughout the project term. In accordance with California Business and Professions Code Section 7030.5, bidders must verify their Contractor's License number and license expiration date on the bid forms under penalty of perjury.

9. In accordance with California Public Contract Code Section 6109, contractors and subcontractors who are ineligible to perform work on public works projects pursuant to California Labor Code Sections 1777.1 or 1777.7 may neither bid on, be awarded or perform work as a subcontractor on the project.

10. In accordance with California Labor Code Section 1771, not less than the general prevailing rate of per diem wages for work of a similar character in the locality in which the project is to be performed, and not less than the general prevailing rate of per diem wages for holiday and overtime work fixed as provided in the California Labor Code shall be paid to all workers engaged in performing the project. In accordance with California Labor Code Section 1770 and following, the Director of Industrial Relations has determined the general prevailing wage per diem rates for work in the locality in which the project is to be performed. In accordance with California Labor Code Section 1773, the District has obtained the general prevailing rate of per diem wages and the general rate for holiday and overtime work in the locality in which the project is to be performed for each craft, classification or type of worker needed to perform the project. In accordance with California Labor Code Section 1773.2, copies of the prevailing rate of per diem wages are on file at the District Engineer's Office and will be made available on request. A copy of said wage rates is available online at www.dir.ca.gov/DLSR/PWD. In accordance with California Labor Code Section 1777.1, contractors and subcontractors that are found guilty of willfully violating Chapter 1 of Part 7 of Division 2 of the Labor Code (except for Section 1777.5), or that are found guilty of such violations with intent to defraud, and entities in which such contractors or subcontractors have any interest, may be ineligible to bid on, be awarded, or perform project work as a subcontractor.

11. In accordance with California Public Contract Code Section 3400, bidders may propose equals of products listed in the Technical Specifications or Drawings by manufacturer name, brand or model number unless the Technical Specifications or plans specify that the product is necessary to match others in use. Complete information for products proposed as equals must be submitted to the District Engineer's Office for review at least seven (7) working days before the time specified for bid opening in accordance with the bidders instructions contained in the bid package.

12. In accordance with California Public Contract Code Section 22300, except where prohibited by federal regulations or policies, the successful bidder may, on request and at its expense,

substitute securities in lieu of amounts withheld by the District from progress payments to ensure performance under the contract in accordance with the Contract Documents. Such securities will be subject to the terms of the escrow for security deposit agreement contained in the Contract Documents.

13. The District reserves the right to reject any and all bids and/or to waive any bid irregularities to the extent permitted by law. If the District elects to award a contract for performance of the project, the contract will be awarded in accordance with California Public Contract Code Section 20803 and other applicable law to the responsible bidder submitting a responsive bid with the lowest total bid price for the base bid and the following additive or deductive alternate items as further described in the bid package.

14. Questions regarding the bid package should be directed in writing as soon as possible (but no later than five (5) working days prior to the opening of bids to: Irene Huang, PE, Associate Engineer, 101 Lucas Valley Road, Suite 300, San Rafael, CA 94903. Where appropriate, the District may respond to such questions by addenda transmitted to all bid package recipients.

15. All bids will remain valid for ninety (90) calendar days after the bid opening. Except as permitted by law and subject to all applicable remedies, including forfeiture of bidder's security, bidders may not withdraw their bid during the ninety (90) day period after the bid opening.

Las Gallinas Valley Sanitary District

By: /s/ Michael P. Cortez

Michael P. Cortez PE, District Engineer

Date: 4/19/2024

LAS GALLINAS VALLEY SANITARY DISTRICT
101 Lucas Valley Road, Suite 300
San Rafael, California 94903

INSTRUCTIONS TO BIDDERS

1. DEFINITIONS

1.1 Bid forms. The bid forms are the forms contained in Volume 2 of the bid package.

1.2 Bid package. A complete bid package consists of the following documents: Volume 1 – Contract Forms includes the, Notice Inviting Sealed Bids, Instructions to Bidders, Contract Check List, Contract, Performance Bond, Payment/Labor Bond, and Escrow for Security Deposit Agreement. Volume 2 – Bid Forms, includes the Bidder's Check List, Bid Label, Proposal Cover Page and Bid Schedule, Bid Bond, Contractor License Information, List of Proposed Subcontractors, Workers Compensation Insurance Certification, Non-Collusion Affidavit, Drug-Free Workplace Certification, Debarment Certification, Statement of Experience of Bidder, Financial Qualifications, Site Visit Affidavit, and Bidder's Signature Page. Volume 3 – Technical Specifications, and Supplemental Reports or Data (if any). Volume 4 – Figures.

1.3 Contract Documents. The Contract Documents refer to all of the documents incorporated into the final Project contract as listed in the contract.

1.4 Project. The Project is the BIOSOLIDS LAND APPLICATION SERVICES 2024 project as described in the Technical Specifications and Drawings included in the project bid package.

1.5 Drawings. The Drawings are primarily graphic detailed requirements concerning the Project and are contained in Volume 4 of the bid package.

1.6 Technical Specifications. The Technical Specifications provide detailed requirements concerning the Project and are contained in Volume 3 of the bid package.

2. BIDDER'S REPRESENTATIONS

Each bidder by submitting a bid represents that:

2.1 The bidder has read and understands the bid package and the bid is in accordance with all of the requirements of the bid package and applicable law.

2.2 Neither the bidder nor any subcontractor included on the list of proposed subcontractors submitted with the bid, are ineligible to perform work on public works projects pursuant to California Labor Code Sections 1777.1 or 1777.7.

2.3 The bidder understands that quantities of unit price items may vary from the estimates provided in the Technical Specifications.

2.4 Representatives of the bidder have visited the Project site and have familiarized themselves with the conditions under which the Project work is to be performed so as to ensure that the Project work may be performed for the amount bid.

2.5 The bidder has informed the District in writing no later than five (5) working days prior to the time specified for bid opening of any apparent conflicts, errors, or ambiguities contained in the bid package or between the contents of the bid package and the Project site.

3. PRE-BID COMMUNICATION AND INTERPRETATION OF THE BID PACKAGE

3.1 Any bidder that discovers any apparent conflicts, errors, or ambiguities contained in the bid package or between the contents of the bid package and the Project site, or that has questions or requires clarification concerning the bid package or its intent must inform the District in writing as soon as reasonably possible, but no later than five (5) working days before the date specified for bid opening. Such notice to the District must be sent to the address specified in the Notice Inviting Sealed Bids for questions concerning the bid package. Questions received less than five (5) working days before the time specified for opening bids may not be answered.

3.2 Any interpretation, correction or change of the bid package prior to bid opening will be made by addendum signed by an authorized representative of the District and transmitted to all bid package recipients. No other interpretation or information concerning the bid package issued prior to the date specified for opening bids will be binding. All addenda signed by an authorized representative of the District and issued prior to the time and date specified for opening bids will form a part of the Contract Documents and must be acknowledged on the bid forms. Any changes, exceptions or conditions concerning the Project and/or the bid package submitted by any bidder as part of a bid may render that bid non-responsive.

4. PRE-BID ACCESS TO THE PROJECT SITE

4.1 Prior to submitting a bid, it will be the sole responsibility of each bidder to conduct any additional examination, investigation, exploration, test, study or other inquiry and to obtain any additional information pertaining to the physical conditions (including surface, subsurface, and underground utilities) at or near the Project site that may affect the cost, progress, or performance of the Project, and that the bidder deems are necessary to prepare its bid for performance of the Project in accordance with the bid package and Contract Documents. Bidders seeking any such additional examination or other inquiries or information concerning the Project will do so at the bidder's sole expense.

4.2 Bidders seeking to conduct any additional examination or other inquiry at the Project site must request site access from the District at least two (2) working days in advance. The location of any excavation, boring or other invasive testing will be subject to approval on behalf of the District and any other agencies with jurisdiction over such testing. Bidders may not conduct tests at the Project site prior to obtaining District approval. The District may require bidders to execute an access agreement prior to approving testing at the Project site. Once approved testing is complete, Bidders must fill all trenches or holes, restore all pavements to match existing structural section, and otherwise clean up and restore the test site to its pre-test condition.

5. BIDDING PROCEDURE

5.1 Bids must be delivered to the **Engineering Department, Las Gallinas Valley Sanitary District, 101 Lucas Valley Road, Suite 300, San Rafael, California 94903,** no later than the time and date specified in the Notice Inviting Sealed Bids. Bids will be opened and read publicly at that time. Bids that are submitted late according to the official time kept by the District Engineer or a designee will be returned unopened. Telephones for use by bidders are not available at the District offices.

5.2 In accordance with California Public Contract Code Section 20804.5, bids must be presented under sealed cover. A completed bid label form furnished with the bid forms must be affixed to and visible on the outside of the sealed bid cover at the time the bid is submitted. Bids must be submitted using the bid forms furnished with the bid package. Bids must include all documents listed in the Bidder's Check List contained in Volume 2 completed in accordance with the bid package. Bids must bear the bidder's legal name and be signed by a representative authorized to bind the bidder. Bids must be typed or written in ink. Corrections may be made if initialed by the individual signing the bid. No oral or telegraphic modifications of bids, including facsimile modifications, will be considered. Bids that are incomplete or that are not presented on the bid forms furnished with the bid package may be deemed non-responsive.

5.3 Each bid must give the full business address of the bidder. Bids of partnerships must furnish the full name of all partners and must be signed in the partnership name by one of the members of the partnership, or by an authorized representative, followed by the printed name and title of the person signing. Bids of corporations must be signed with the legal name of the corporation, followed by the name of the state of incorporation and by the signature and designation of the president, secretary or other person authorized to bind the corporation. The name of each person signing shall also be typed or printed below the signature. Upon request of the District, bidders will furnish satisfactory evidence of the authority of the person signing the bid. Bids of joint ventures must include a certified copy of the legal agreement constituting the joint venture.

5.4 No person, firm, corporation, partnership or legal joint venture may submit more than one bid for the Project. However, a person, firm, corporation, partnership or legal joint venture that has submitted a subcontract proposal to a bidder, or that has quoted prices on materials to a bidder may submit a subcontract proposal, quote prices to other bidders and submit its own bid.

5.5 In accordance with California Public Contract Code Section 20804.5, all bids must include one of the forms of bidder's security specified in the Notice Inviting Sealed Bids in an amount of at least ten (10) per cent of the total of the bid prices for the base bid and those additive or deductive items specifically identified in the Notice Inviting Sealed Bids for the purpose of determining the lowest price bid. Bidders that elect to provide bidder's security in the form of a bid bond must execute a bid bond using the form provided in the bid forms. The bidder's security is tendered as a guarantee that the successful bidder, if awarded the Project contract, will execute and submit to the District all required bonds, certificates of insurance, completed contract forms and other documents listed in the Contract Check List in Volume 1 of the bid package and enter into a contract with the District within seven (7) calendar days of receipt of the

Notice of Award. The bidder's security of any successful bidder that fails to do so will be forfeited to the District. All bidders' security not forfeited to the District will be returned once a successful bidder provides all required documents and enters a contract with the District in accordance with all applicable bid package requirements. Forfeiture of the bidder's security to the District will not waive or otherwise limit any other remedy available to the District under applicable law.

5.6 In accordance with California Business and Professions Code Section 7028.15, Public Contract Code Section 20103.5, and as specified in the Notice Inviting Sealed Bids, all Project work must be performed by properly licensed contractors and subcontractors with active licenses in good standing as of the date and time specified for bid opening, or, if the project involves federal funds, no later than the time the Project contract is awarded. Bidders must verify their Contractor's License number and license expiration date on the proposal cover page under penalty of perjury. Bids that do not satisfy applicable licensing requirements will be considered non-responsive and rejected and may subject the bidder to criminal and/or civil penalties.

5.7 If the bid forms include a bidder's questionnaire, all bids must include a completed bidder's questionnaire on the forms provided**.** By submitting a bid, bidders authorize District representatives to verify any and all information provided on the bidder's questionnaire and agree to indemnify, defend and hold harmless the District and its officials, officers, employees, agents and volunteers to full the extent permitted by law from and against any claims, liability or causes of action, including, without limitation, legal fees and costs, arising out of verification of the information provided on the bidder's questionnaire, and/or arising out of use of information provided in the bidder's questionnaire to determine, in accordance with applicable law, the qualification of the bidder for performing the Project.

5.8 Bids may be withdrawn prior to the time set for bid opening by a written request signed by an authorized representative of the bidder filed with the District Engineer. The bid security submitted with bids so withdrawn will be returned to the bidder. Bidders that have withdrawn their bid in accordance with this provision may submit a new bid prior to the time set for bid opening in accordance with all applicable bid package requirements. Bids may not be withdrawn during the ninety (90) day period after the time set for bid opening except as permitted by law pursuant to California Public Contract Code Section 5100 and following. Any other bid withdrawal will result in forfeiture of the bidder's bid security to the District.

6. BID PROTESTS

Any protest of the proposed award of Bid to the bidder deemed the lowest responsible bidder must be submitted in writing to the District, no later than 3:00 PM on the third (3rd) business day following the date of the Bid opening.

6.1 The initial protest must contain a complete statement of the basis for the protest.

6.2 The protest must state the facts and refer to the specific portion of the document or the specific statute that forms the basis for the protest. The protest must include the name, address, and telephone number of the person representing the protesting party.

6.3 The party filing the protest must concurrently transmit a copy of the initial protest to the bidder deemed the lowest responsible bidder.

6.4 The party filing the protest must have actually submitted a Bid on the Project. A subcontractor of a party filing a Bid on this Project may not submit a Bid Protest. A party may not rely on the Bid Protest submitted by another Bidder, but must timely pursue its own protest.

6.5 The procedure and time limits set forth in this Section are mandatory and are the Bidder's sole and exclusive remedy in the event of a Bid Protest. The Bidder's failure to fully comply with these procedures shall constitute a waiver of any right to further pursue the Bid Protest, including filing of a challenge of the award pursuant to the California Public Contracts Code, filing of a claim pursuant to the California Government Code, or filing of any other legal proceedings.

6.6 The District shall review all timely protests prior to formal award of the Bid. The District shall not be required to hold an administrative hearing to consider timely protest, but may do so at the option of the General Manager. At the time of the District Board's consideration of the award of the bid, the District Board shall also consider the merits of any timely protests. The District Board may either accept the protest and award the bid to the next lowest responsible bidder or reject the protest and award to the lowest responsible bidder. Nothing in this section shall be construed as a waiver of the District Board's right to reject all bids.

6.7 The District reserves the right to waive any bid irregularities not affecting the amount of the bid, except where such waiver would give the low bidder an advantage or benefit not allowed other bidders.

7. AWARD

7.1 In accordance with applicable law, the District reserves the right to reject any or all bids and to waive any informality in any bid. The District reserves the right to accept any portion of any bid, unless the bid package expressly provides that the award will be made as a whole. If the District elects to award a contract for performance of the Project, the contract will be awarded in accordance with California Public Contract Code Section 20803 and other applicable law to the responsible bidder submitting a responsive bid with the lowest total bid price for the base bid and the additive or deductive alternate items listed in the Notice Inviting Sealed Bids. In accordance with the Contract Documents and other applicable law, the District may add or deduct items of work from the Project after the lowest responsible bidder is determined.

7.2 The successful bidder must submit to the District complete, executed copies of all documents specified in the contract checklist included in Volume 1 of the bid package within seven (7) calendar days of receiving written Notice of Award of the Project. Bidder's security of any successful bidder that fails to do so will be forfeited to the District.

7.3 The successful bidder and any subcontractors and others engaged in performance of the Project must have valid local business license(s), as applicable, before commencing work on the Project.

7.4 Upon verifying that the successful bidder has provided complete, executed copies of all documents specified in the contract checklist included in Volume 1 of the bid package,

an authorized District representative will execute the Project contract, and the District will issue to the successful bidder a Notice to Proceed specifying the Project commencement date. The number of working days within which the Project must be complete begins to run on the Project commencement date.

8. PRICING

8.1 If an inconsistency exists between the amount listed for a unit price in a bid and the total listed for that bid item (e.g., if the total listed for a bid item does not equal the unit price listed in the bid multiplied by the quantity listed), subject to applicable law, the unit price will be deemed to accurately reflect the bidder's intent concerning the bid item and the intended total for the bid item will be deemed to be the unit price as listed in the bid multiplied by the quantity listed.

8.2 If the Project bid price is a lump sum total made up of smaller individual bid item prices and an inconsistency exists between the lump sum total bid price and any individual bid item price, subject to applicable law, the individual bid item prices as listed in the bid will be deemed to accurately reflect the bidder's intended bid for the Project and the intended lump sum total bid for the Project will be deemed to be the sum of the individual bid item prices as listed in the bid, even if that sum is different from the amount actually listed as the lump sum total bid for the Project.

8.3 Any federal, state, or local tax payable on articles to be furnished for the Project shall be included in the lump sum total bid price and paid by the Contractor under the contract.

9. QUANTITIES

9.1 Quantities, including but not limited to, material or labor quantities, that are provided in the bid package concerning the Project are estimates only and are provided solely as a general indication of the Project scope. The District does not warrant that such quantity estimates provided in the bid package represent the actual quantities required to perform the Project in accordance with the Contract Documents. Such quantity estimates do not bind the District, and bidders should not rely on them in preparing their bids. Each bidder is solely responsible for determining the quantities on which to base their bids in light of information contained in the bid package, bidder investigation and analysis of the Project and the Project site, and any other analysis or expertise of the bidder concerning the Project.

9.2 The District may amend, decrease or increase the Project work in accordance with the bidding package and the Contract Documents. If the District amends, decreases or increases the Project work prior to award of the Project each bidder will be solely responsible for determining the revised quantities, if any, on which to base their bid in light of information contained in the bid package and any amendments or addenda to the bid package, bidder investigation and analysis of the Project as amended, decreased or increased, the Project site, and any other analysis or expertise of the bidder concerning the Project.

10. SUBSTITUTION OF "OR EQUAL" ITEMS

10.1 In accordance with California Public Contract Code Section 3400, where the Drawings list products by manufacturer's name, brand or model number such information

indicates the quality and utility of the items desired and does not restrict bidders to that manufacturer's name, brand or model number, unless the Technical Specifications or Drawings specify that the listed product is necessary to match others in use on a particular public improvement either completed or in the course of completion. Except where the Specifications indicate that a particular brand product is necessary to match others in use, when a manufacturer's name, brand or model number is listed, it shall be construed to be followed by the words "or equal" whether or not those words in fact follow the manufacturer's name, brand name or model number listed in the Technical Specifications or Drawings. Unless the Technical Specifications or Drawings indicate that a particular brand product is necessary to match others in use, bidders may propose equals of products listed by manufacturer name, brand name or model number.

10.2 Complete information for products proposed as equals must be submitted to the District Engineer for review at least seven (7) calendar days before the time specified for opening bids. To be considered, proposals concerning products proposed as equals must include sufficient information to permit the District to determine whether the products proposed as equals will satisfy the same performance requirements as products listed by manufacturer's name, brand or model number. Such performance requirements may include, but are not limited to, size, strength, function, appearance, ease of maintenance and repair, and useful life requirements. Proposals concerning products proposed as equals that are submitted less than seven (7) calendar days before the time specified for opening bids will not be considered. Failure to bid products specified by manufacturer name, brand name or model number where the Technical Specifications or Drawings specify that a particular product is necessary to match others in use, or where no proposal concerning products proposed as equals has been submitted in accordance with this provision may render a bid non-responsive.

11. SUBCONTRACTING

11.1 Bids must be in accordance with the requirements of the Subletting and Subcontracting Fair Practices, Act, California Public Contract Code Section 4100 and following. Bids must include a completed list of proposed subcontractors on the form included in the bid package. In accordance with California Public Contract Code Section 4104, completed lists of proposed subcontractors must include the name, business location, the portion (type or trade), and dollar amount of the Project work to be subcontracted for each subcontractor that will perform a portion of the Project work (including special fabrication and installation of a portion of the work) valued in excess of one half (½) of one (1) percent of the total Project bid price. If the Project work includes construction of streets or highways, the completed list of proposed subcontractors must include the subcontractor name, business location, type of work and dollar amount to be subcontracted for each subcontractor that will perform a portion of the Project work (including special fabrication and installation of a portion of the work) valued in excess of one half (½) of one (1) percent of the total Project bid price, or ten thousand dollars ($10,000), whichever is greater. Bids that fail to include complete lists of proposed subcontractors in accordance with Public Contract Code Section 4100 and following and this provision may be deemed non-responsive.

11.2 In accordance with California Public Contract Code Section 4106, for any portion of the Project work with a value of more than one half (½) of one (1) percent of the total Project bid price for which no subcontractor is listed, or for which more than one

subcontractor is listed, bidders certify by submitting their bids that they are qualified to perform that portion of the Project work and that they will perform that portion of the Project work with their own forces. Bidders may not substitute another subcontractor for a subcontractor listed in their bid except as permitted by the District in accordance with Section 4107 and following of the California Public Contract Code.

12. ASSIGNMENT

Bidders may not assign, sublet, sell, transfer, or otherwise dispose of their bid or any right, title or interest in their bid, or their obligations under their bid, without the written consent of an authorized representative of the District. Any purported assignment, subletting, sale, transfer or other disposition of a bid or any interest in a bid, or of any obligations under a bid without such written consent will be void and of no effect.

13. BONDS

The successful bidder must submit to the District a performance bond within seven (7) calendar days of receiving written Notice of Award. If the Project involves expenditures in excess of twenty five thousand dollars ($25,000), the successful bidder must submit to the District a payment or labor and materials bond within seven (7) calendar days of receiving written Notice of Award. Prior to issuance of the final Project payment, the successful bidder must submit a warranty or maintenance bond. All bonds must be executed by corporate sureties who are admitted surety insurers in the State of California in accordance with applicable law and acceptable to the District. Individual sureties will not be accepted. All project bonds must be executed using the forms provided in the bid package.

13.1 In accordance with California Civil Code Section 3247, the payment or labor and materials bond must be in the amount of one hundred percent (100%) of the total amount payable by the terms of the Project contract and guarantee payment to persons listed in California Civil Code Section 3181 for work performed and for charges for materials, supplies, and equipment provided under the Project contract (including amounts due under or subject to the Unemployment Insurance Code) in accordance with the requirements of California Civil Code Section 3248.

13.2 The performance bond must be in the amount of one hundred (100) percent of the amount payable by the terms of the Project contract to guarantee the faithful performance of the Project work.

13.3 The warranty or maintenance bond must be in the amount of ten (10) percent of the final Project contract amount and guaranty the Project work against defects in materials, equipment, workmanship, or needed repair for three (3) years from the District’s acceptance of the Project work.

14. LABOR LAWS

14.1 Bidders shall comply with applicable provisions of Chapter 1 of Part 7 of the California Labor Code, beginning with Section 1720.

14.2 In accordance with California Labor Code Section 1861, bids must include a workers’ compensation insurance certification on the form included in the bid package.

14.3 In accordance with California Labor Code Section 1771, not less than the general prevailing rate of per diem wages for work of a similar character in the locality in which

the project is to be performed, and not less than the general prevailing rate of per diem wages for holiday and overtime work fixed as provided in the California Labor Code shall be paid to all workers engaged in performing the project.

14.4 In accordance with California Labor Code Section 1770 and following, the Director of Industrial Relations has determined the general prevailing wage per diem rates for work in the locality in which the project is to be performed. A copy of said wage rates is available online at www.dir.ca.gov/DLSR/PWD. Said prevailing rate of per diem wages will be made available to any party upon request, and a copy thereof shall be posted at the jobsite by the Contractor.

14.5 In accordance with California Labor Code Section 1777.1, contractors and subcontractors that are found guilty of willfully violating Chapter 1 of Part 7 of Division 2 of the Labor Code (except for Section 1777.5), or that are found guilty of such violations with intent to defraud, and entities in which such contractors or subcontractors have any interest, may be ineligible to bid on, be awarded, or perform project work as a subcontractor.

THIS PAGE INTENTIONALLY LEFT BLANK

LAS GALLINAS VALLEY SANITARY DISTRICT
101 Lucas Valley Road, Suite 300
San Rafael, California 94903

CONTRACT CHECK LIST

Complete, accurate, executed copies of the following documents must be submitted to the Las Gallinas Valley Sanitary District in accordance with the bid package issued by the District for the BIOSOLIDS LAND APPLICATION SERVICES 2024 project, JOB NO. 24580-01, within seven (7) calendar days of receiving written Notice of Award of the project. The bidder's security of any successful bidder that fails to do so will be forfeited to the District.

Contract Check List:

_____ 2 copies of the signed Agreement

_____ Performance Bond

_____ Payment/Labor and Materials Bond

_____ Certificates of Insurance and Endorsements

_____ Escrow for Deposit Agreement, if applicable

_____ Safety Manual

_____ Appendix E: DIR Form PWC-100 Supplemental Questionnaire. Submit a completed form for the Contractor and each Subcontractor listed in the List of Proposed Subcontractors submitted with the bid. List Contractor's and all Subcontractors' license number, name, address, phone number, email address, and classification of workers they are providing at the time of the contract signing.

THIS PAGE INTENTIONALLY LEFT BLANK

LAS GALLINAS VALLEY SANITARY DISTRICT
101 Lucas Valley Road, Suite 300
San Rafael, California 94903

AGREEMENT

The Las Gallinas Valley Sanitary District, ("District") enters into this agreement, dated _____, with _____("Contractor"), whose address is _____.

RECITALS

1. NOTICE INVITING SEALED BIDS. The District gave Notice Inviting Sealed Bids on _____ for bids to be submitted for the BIOSOLIDS LAND APPLICATION SERVICES 2024 project by published notice and/or posting in accordance with California Public Contract Code Section 20804 and other applicable law.

2. BID OPENING. On _____**,** District representatives opened the bids for the BIOSOLIDS LAND APPLICATION SERVICES 2024 project and read the bids aloud.

3. PROJECT AWARD. On _____, the District Board awarded the BIOSOLIDS LAND APPLICATION SERVICES 2024 project to the Contractor and directed District staff to send the Contractor written Notice of Award of the project. The District Board conditioned award of the project on the Contractor's providing executed copies of all documents specified in the contract check list included in the bid package within seven (7) calendar days of receiving written Notice of Award of the project.

4. REQUIRED DOCUMENTS. The Contractor has provided the District executed copies of all documents specified in the contract check list included in the bid package within seven (7) calendar days of receiving written Notice of Award, unless noted otherwise.

AGREEMENT TERMS

The District and the Contractor agree as follows:

1. THE WORK. The Contractor shall furnish all equipment, tools, apparatus, facilities, material labor, and skill necessary to perform and complete in a good and workmanlike manner the BIOSOLIDS LAND APPLICATION SERVICES 2024 project ("Work") as shown in the Technical Specifications and Drawings in accordance with the Contract Documents and applicable law.

2. LOCATION OF WORK. The Work will be performed at the following location:

   300 Smith Ranch Road, San Rafael, CA

3. TIME FOR COMPLETION. The Contractor must complete the Work in accordance with the Contract Documents within **60 calendar days** from the date specified in the District's Notice to Proceed ("Time for Completion").

4. REMEDIES FOR FAILURE TO TIMELY COMPLETE THE WORK. If the Contractor fails to fully perform the Work in accordance with the Contract Documents by the Time for Completion, as such time may be amended by change order or other modification to this agreement in accordance with its terms, and/or if the Contractor fails, by the Time for Completion, to fully perform all of the Contractor's obligations under this agreement that have accrued by the Time for Completion, the Contractor will become liable to the District for all resulting loss and damage in accordance with the Contract Documents and applicable law. The District's remedies for the Contractor's failure to perform include, but are not limited to, assessment of liquidated damages of **$1,000 per day** in accordance with California Government Code Section 53069.85 and the Contract Documents, and/or obtaining or providing for substitute performance in accordance with the Contract Documents.

5. CONTRACT PRICE AND PAYMENT. As full compensation in consideration of completion of the Work in accordance with the Contract Documents and in consideration of the fulfillment of all of the Contractor's obligations under the Contract Documents, the District will pay the Contractor in lawful money of the United States the total price of _____(the "Contract Price") as specified in the Contractor's completed Bid Schedule dated _____, and attached to and incorporated in this agreement. Payment to the Contractor under this agreement will be for Work actually performed in accordance with the Contract Documents and will be made in accordance with the requirements of the Contract Documents and applicable law. The District will have no obligation to pay the Contractor any amount in excess of the Contract Price unless this agreement is first modified in accordance with its terms. The District's obligation to pay the Contractor under this agreement is subject to and may be offset by charges that may apply to the Contractor under this agreement. Such charges include but are not limited to, charges for liquidated damages and/or substitute performance in accordance with the Contract Documents.

6. PREVAILING WAGES. In accordance with California Labor Code Section 1771, not less than the general prevailing rate of per diem wages for work of a similar character in the locality in which the Work is to be performed, and not less than the general prevailing rate of per diem wages for holiday and overtime work fixed as provided in the California Labor Code must be paid to all workers engaged in performing the Work. In accordance with California Labor Code Section 1770 and following, the Director of Industrial Relations has determined the general prevailing wage per diem rates for the locality in which the Work is to be performed. In accordance with California Labor Code Section 1773, the District has obtained the general prevailing rate of per diem wages and the general rate for holiday and overtime work in the locality in which the Work is to be performed for each craft, classification or type of worker needed to perform the project. In accordance with California Labor Code Section 1773.2, copies of the prevailing rate of per diem wages are on file at the District Engineer's Office and will be made available on request. Throughout the performance of the Work the Contractor must comply with all provisions of the Contract Documents and all applicable laws and regulations that apply to wages earned in performance of the Work.

7. THE CONTRACT DOCUMENTS. This agreement consists of the following documents ("Contract Documents"), all of which are incorporated into and made a part of this agreement as if set forth in full. In the event of a conflict between or among the Contract Documents, precedence will be in the following order:

    a. Permits

b. Typical Details
c. Reference Standard Specs
d. Reference Standard Plans

7.1 This agreement and change orders and other amendments to this agreement signed by authorized representatives of the District and the Contractor.

7.2 The General Conditions and change orders and other amendments to the General Conditions signed by authorized representatives of the District and the Contractor.

7.3 The Technical Specifications, addenda to the Technical Specifications signed by authorized representatives of the District and issued prior to bid opening, Equal Product Proposals accepted by the District and signed by authorized District representatives prior to bid opening, and change orders and other amendments to the Technical Specifications signed by authorized representatives of the District and the Contractor.

7.4 The Drawings, addenda to the Drawings signed by authorized representatives of the District and issued prior to bid opening, Equal Product Proposals accepted by the District and signed by authorized District representatives prior to bid opening, and change orders and other amendments to the Drawings signed by authorized representatives of the District and the Contractor.

7.5 Notice Inviting Sealed Bids
7.6 Instructions to Bidders
7.7 The successful bidder's completed Proposal Cover Page and Bid Schedule
7.8 The successful bidder's completed Contractor License Information
7.9 The successful bidder's completed Notice to Proceed
7.10 The successful bidder's completed List of Proposed Subcontractors
7.11 The successful bidder's Workers Compensation Insurance Certification
7.12 The successful bidder's completed Non-Collusion Affidavit
7.13 The successful bidder's Drug-Free Workplace Certification
7.14 The successful bidder's Debarment Certification
7.15 The successful bidder's completed Certificates of Insurance and Endorsements
7.16 The successful bidder's executed Performance Bond
7.17 The successful bidder's executed Payment Bond
7.18 The Maintenance Bond form included in the bid package that the Contractor must execute prior to release of final payment under the Contract
7.19 The successful bidder's Statement of Experience
7.20 The successful bidder's signed Bidder's Signature Page
7.21 The successful bidder's Financial Qualifications

8. INTERPRETATION OF CONTRACT DOCUMENTS. Any question concerning the intent or meaning of any provision of the Contract Documents, including, but not limited to, the Technical Specifications or Drawings, must be submitted to the District Engineer, or his/her designee, for issuance of an interpretation and/or decision by the authorized District representative in accordance with the requirements of the Contract Documents. Interpretations or decisions by any other person concerning the Contract Documents will not

be binding on the District. The decision of the District Engineer, or his/her designee, shall be final.

9. ASSIGNMENT PROHIBITED. The Contractor may not assign part or all of this agreement, or any moneys due or to become under this agreement, or any other right or interest of the Contractor under this agreement, or delegate any obligation or duty of the Contractor under this agreement without the prior written approval of an official authorized to bind the District and an authorized representative of Contractor's surety or sureties. Any such purported assignment or delegation without such written approval on behalf of the District and the Contractor's sureties will be void and a material breach of this agreement subject to all available remedies under this agreement and at law and equity.

10. CERTIFICATION RE: CONTRACTOR'S LICENSE. By signing this Agreement the Contractor certifies that the Contractor holds a valid **Class A** license issued by the California State Contractors Licensing Board, and that the Contractor understands that failure to maintain its license in good standing throughout the performance of the Work may result in discipline and/or other penalties pursuant to the California Business and Professions Code, and may constitute a material breach of this agreement subject to all available remedies under this agreement and at law and equity.

11. SEVERABILITY. If any term or provision or portion of a term or provision of this Agreement is declared invalid or unenforceable by any court of lawful jurisdiction, then the remaining terms and provisions or portions of terms or provisions will not be affected thereby and will remain in full force and effect.

12. VENUE. This Agreement shall be governed and construed by the laws of the State of California. The parties agree that jurisdiction and venue of any dispute shall be in the Superior Court of the State of California in the County of Marin, exclusively.

13. ENTIRE AGREEMENT. This Agreement supersedes any and all other agreements, either oral or in writing, between the parties with respect to the subject of this agreement. This agreement contains all of the covenants and agreements between the parties with respect to the subject of this agreement, and each party acknowledges that no representations, inducements, promises, or agreements have been made by or on behalf of any party except the covenants and agreements embodied in this Agreement. No agreements, statement, or promise not contained in this Agreement shall be valid or binding between the parties with respect to the subject of this Agreement. Any modifications shall be in writing.

Executed on _____ by

CONTRACTOR	DISTRICT
By: _____	By: _____ Curtis Paxton, General Manager Las Gallinas Valley Sanitary District
Title:	Attest:
[Attach Notary Page]	By: _____

LAS GALLINAS VALLEY SANITARY DISTRICT
101 Lucas Valley Road, Suite 300
San Rafael, California 94903

GENERAL CONDITIONS

1. DEFINITIONS:

The following terms as used in any agreement of which these General Conditions are a part are defined as follows:

1.1 Agreement: The agreement between the District and Contractor concerning the Project, as evidenced by and comprised of the Contract Documents.

1.2 Architect or Engineer: The person or persons so specified on the title sheet of the Technical Specifications and/or Drawings.

1.3 Bid Package: All of the documents listed as comprising the entire Bid Package as specified in the Instructions to Bidders and representing the full set of documents made available to bidders on the Project.

1.4 District: Las Gallinas Valley Sanitary District

1.5 Documents: All those documents listed in the Project agreement as comprising the entire agreement between the District and the Contractor.

1.6 Construction Manager – The person, firm, designated in writing by the District to act as its representative at the construction site and to perform construction observation services and administrative functions relating to this Contract. All contact by the Contractor with the District shall be through the Construction Manager.

1.7 Contractor: The successful bidder for the Project and party to the Project agreement with the District as specified in the Project agreement.

1.8 Days: Unless otherwise specified in the Contract Documents, days mean working days. Where necessary for clarity, calendar days and working days are appropriately specified as such in the Contract Documents.

1.9 Project: The BIOSOLIDS LAND APPLICATION SERVICES 2024 project as described in the Technical Specifications and Drawings.

1.10 District Engineer: The District's authorized representative for administration and overall management of the Project agreement and Work. The District Engineer is the official point of contact between the District, the Architect and/or Engineer, and the Contractor.

1.11 Owner: Las Gallinas Valley Sanitary District

1.12 Drawings: The primarily graphic detailed requirements concerning the Project contained in Volume 4 of the Bid Package and any addenda to the Drawings signed by authorized District representatives and issued prior to bid opening, Equal Product

Proposals accepted by the District and signed by authorized District representatives prior to bid opening, and change orders and other amendments to the Drawings signed by authorized representatives of the District and the Contractor in accordance with the requirements of the Contract Documents.

1.13 Project Inspector: The party or parties charged by the District with inspecting the Work for compliance with the requirements of the Contract Documents and applicable laws and regulations. The Project Inspector acts under the direction of the District and shall coordinate with the District Engineer and Architect as directed by the District in accordance with the Contract Documents.

1.14 Subcontractor: A person, firm or corporation that is obligated as a party to a contract with the Contractor to perform part of the Project work. For purposes of these General Conditions Subcontractors include, but are not limited to, those that are obligated as parties to a contract with the Contractor to specially fabricate and install a portion of the Project Work according to the Technical Specifications and/or Drawings.

1.15 Technical Specifications: The detailed Project requirements contained in Volume 3 of the Bid Package and any addenda to the Technical Specifications signed by authorized District representatives and issued prior to bid opening, Equal Product Proposals accepted by the District and signed by authorized District representatives prior to bid opening, and change orders and other amendments to the Technical Specifications signed by authorized representatives of the District and the Contractor in accordance with the requirements of the Contract Documents.

1.16 Work: The furnishing of all equipment, tools, apparatus, facilities, material, labor and skill necessary to perform and complete in a good and workmanlike manner the Project as shown in the Technical Specifications and Drawings in accordance with the Contract Documents and applicable law.

1.16 Written Notice: Will be deemed to have been duly served for purposes of these General Conditions and any agreement of which they are a part if delivered in person to the individual or to a member of the firm or to any office of the corporation for whom the notice is intended, or if sent by registered or certified mail to the last known business address known to the party giving notice. Unless otherwise specified in the Contract Documents, the last known address of the Contractor shall be that listed in the Contractor's completed Proposal Cover Page and Bid Schedule.

2. SCOPE OF WORK

2.1 Documents Furnished by District. The District will furnish to the Contractor, free of charge, five (5) sets of half-size prints of the Drawings and Technical Specifications for execution of the Work. Throughout the performance of the Work the Contractor must keep one copy of the Drawings and Technical Specifications in good order and available for review by the District Engineer, the Engineer, the Architect, and any other District contractors or representatives.

2.2 Ownership of Documents Furnished by District. All documents furnished by the District, including, but not limited to, the Technical Specifications, Drawings, and any copies, are the property of the District. Documents furnished by the District may not to

be used on any other work. All documents furnished by the District must be returned to District upon completion of the Work.

2.3 Technical Specifications and Drawings.

2.3.1 The Technical Specifications and Drawings are complementary and intended to mutually describe the Work necessary to complete the Project in accordance with the Contract Documents.

2.3.2 In general, the Drawings indicate dimensions, position and kind of construction, and the Technical Specifications indicate qualities and methods. Any Work indicated on the Drawings and not mentioned in the Technical Specifications or vice versa must be furnished as though fully set forth in both. Work that is not particularly detailed, marked or specified shall be the same as similar Work that is detailed, marked or specified. The Contractor must furnish items necessary for the operation of equipment depicted in the Drawings or specified in the Technical Specifications that are suitable to allow such equipment to function properly at no extra charge.

2.3.3 The Contractor must notify the District Engineer and the Architect as soon as possible of any apparent errors or inconsistencies, including, but not limited to, typographical or notational errors in the Drawings, Technical Specifications, and/or in work done by others affecting the Work. The District Engineer will issue instructions concerning any such apparent errors or inconsistencies. If the Contractor proceeds with Work impacted by apparent errors or inconsistencies without instructions from the District Engineer, the Contractor shall do so at its sole risk and shall have all of the obligations and the District shall have all of the rights and remedies specified in Section 11 concerning any resulting damage or defect.

2.3.4 The General Conditions apply with equal force to all of the Work, including extra work authorized by the District Engineer in accordance with the Contract Documents. The Contractor must submit any required shop diagrams and/or drawings by the times and in the quantities indicated in the Technical Specifications. Any such shop diagrams and/or drawings must show completely the Work to be done, expanding on the Drawings concerning details not previously shown, field conditions and the condition of the Work. Architect or Engineer review of such shop diagrams and/or drawings will concern conformance with the requirements of the Contract Documents only. The Architect or Engineer assumes no responsibility for the correctness or accuracy of the dimensions, or any other contents of any shop diagrams and/or drawings submitted by the Contractor. The Contractor must check all dimensions at the Work site. Shop diagrams and/or drawings must be clearly marked with the name of the Project and the name of the Contractor, subcontractor or supplier making the submittal, and must be stamped and signed by the Contractor and submitted under a signed transmittal letter from the Contractor certifying that all dimensions have been checked at the Work site. These requirements are mandatory. The Architect or Engineer will not review shop diagrams and/or drawings that do not satisfy these requirements. The Contractor will be responsible for any and all discrepancies between dimensions of the actual Project site and/or Work and those shown on shop diagram and/or drawings

submitted by the Contractor, and for any other errors contained in or resulting from such shop diagrams and/or drawings, including, but not limited to, errors in material and/or equipment quantities and any resulting errors, delays or additional cost in the performance of the Work. The Contractor will have all of the obligations and the District will have all of the rights and remedies that are specified in Section 11 concerning any discrepancies or errors in shop diagrams and/or drawings submitted by the Contractor, and concerning any resulting errors, delays or additional costs in the performance of the Work.

3. CONTROL OF WORK AND MATERIAL

3.1 District Engineer's Status. The District Engineer will administer the Project in accordance with the Contract Documents. After execution of the agreement and issuance of the Notice to Proceed, all correspondence and/or instructions concerning the Project between the Contractor and/or District shall be forwarded through the District Engineer. Except as otherwise provided in the Contract Documents, the District Engineer will not be responsible for and will not have control or charge of construction means, methods, techniques, or procedures or for safety precautions in connection with the Work. The District Engineer, however, will have authority to reject materials and/or workmanship that do not conform to the requirements of the Contract Documents. The District Engineer will also have the authority to require inspection or testing of the Work.

3.2 Architect or Engineer's Status. The Architect or Engineer will advise the District Engineer concerning decisions on all claims of the Contractor and all other matters relating to the execution and progress of the Work or the interpretation of the Contract Documents. The Architect or Engineer will also advise the Construction Manger concerning Work that does not conform to the Contract Documents. Whenever, in the Architect's or Engineer's opinion, it is necessary or advisable in accordance with the Contract Documents, the Architect or Engineer may recommend to the District Engineer inspection or testing of the Work, whether or not such Work is then fabricated, installed or completed.

3.3 Inspection and Testing of Work and Material.

3.3.1 The District, the District Engineer, the Architect or Engineer and their representatives will have access to the Work at all times wherever it is in preparation or progress. The Contractor must provide proper facilities for such access and for inspection.

3.3.2 The Contractor must inspect all materials as delivered and promptly return all defective materials without waiting for their rejection by the District Engineer or Architect or Engineer.

3.3.3 If the District Engineer, the Technical Specifications, or any laws, ordinances, or any public authority require any Work to be tested or approved, the Contractor must give the District Engineer timely notice of the Contractor's readiness for inspection. Inspections will be promptly made, and where practicable, at the source of supply. Any work subject to such testing that is covered up without timely notice to the District Engineer or without the approval or consent of the District Engineer must, if required by the District Engineer, be uncovered for examination at the Contractor's expense. The Contractor will have all of the

obligations and the District will have all of the rights and remedies that are specified in Section 11 concerning any work subject to testing that is covered up without timely notice to the District Engineer and that is not uncovered for examination at the Contractor's Expense if required by the District Engineer.

3.3.4 Tests of materials or qualification tests required by the Contract Documents must be made in accordance with the Technical Specifications and the requirements of the California Building Standards Code as adopted by the District and other applicable law. Copies of all testing reports shall be distributed as required in the Technical Specifications.

3.3.5 The District or its representatives may order re-examination of questioned Work. If ordered to do so, the Contractor must uncover such Work. If such Work is found to be according to the Contract Documents, the District shall pay the cost of uncovering and restoring the Work, unless such Work was subject to testing and covered up without timely notice to or approval of the District Engineer. If re-examined Work is found not in accordance with the Contract Documents, the Contractor must pay the cost of uncovering and restoring the Work. The Contractor will have all of the obligations and the District will have all of the rights and remedies that are specified in Section 11 concerning any re-examined Work not in accordance with the Contract Documents that the Contractor fails to uncover and restore at the Contractor's expense.

3.3.6 The Contractor must replace or correct without charge any material or workmanship found not to conform to the requirements of the Contract Documents, unless the District consents to accept such material or workmanship with an appropriate adjustment in the Contract Price. The Contractor must promptly segregate and remove non-conforming material from the Work site. The Contractor will have all of the obligations and the District will have all of the rights and remedies that are specified in Section 11 concerning any failure by the Contractor to replace or correct without charge any material or workmanship that does not conform to the requirements of the Contract Documents and that the District has not consented to accept.

3.4 Samples Furnished by the Contractor. The Contractor must furnish all samples for approval as directed in sufficient time to permit the Architect or Engineer to examine, approve and select samples before they are required by the progress of the Work. Portions of the Work for which samples are required and for which the Architect or Engineer has selected samples must be in accordance with such approved samples. Samples must be sent prepaid to the office of the District Engineer or to such place as the District Engineer may direct.

3.5 Materials and Substitutions.

3.5.1 Materials used for the Work must be new and of the quality specified. When not particularly specified, materials must be the best of their class or kind. The Contractor must, if required, submit satisfactory evidence as to the kind and quality of materials.

3.5.2 If the Contractor submitted complete information to the District Engineer for products proposed as equals in accordance with the Bid Package, and the District approved such products proposed as equals in writing, the Contractor

may either furnish such products approved as equals, or furnish the products listed by manufacturer name, brand or model number in the Technical Specifications or Drawings. The District retains the right, in its sole discretion, to accept or reject any other proposed substitution. To be considered, proposals concerning products proposed as equals must include sufficient information to permit the District to determine whether the products proposed as equals will satisfy the same performance requirements as products listed by manufacturer's name, brand or model number. Such performance requirements may include, but are not limited to, size, strength, function, appearance, ease of maintenance and repair, and useful life requirements. If the District does not accept a proposed substitution, the Contractor must furnish the product specified in the Technical Specifications or Drawings for the Contract Price, regardless of whether the product is specified by manufacturer's name, brand or model number, or otherwise.

3.5.3. During the performance of the Work, all materials must be neatly stacked, properly protected from the weather and other adverse impacts, and placed so as to avoid interference with efficient progress of the Work, with other activities of the District, or with the use of existing District facilities by the public. All materials must be delivered so as to ensure efficient and uninterrupted progress of the Work. Materials must be stored so as to cause no obstruction and so as to prevent overloading of any portion of the Work. The Contractor will be responsible for damage or loss of materials delivered to and/or stored at the Work site due to weather or other causes. The Contractor must promptly remove from the Work site all materials rejected by the District or its representatives as failing to conform to the requirements of the Contract Documents, whether such non-conforming materials have been incorporated in the Work or not. If the District or its representatives so direct, the Contractor must promptly replace and re-execute Work performed by the Contractor and order the replacement and re-execution of Work performed by subcontractors using non-conforming materials with materials that satisfy the requirements of the Contract Documents without expense to the District. The Contractor will bear the expense of making good all Work destroyed or damaged by such removal. The Contractor will have all of the obligations and the District will have all of the rights and remedies that are specified in Section 11 concerning any failure by the Contractor to replace or re-execute Work using non-conforming materials, and/or to make good all work destroyed or damaged by such removal and/or execution.

3.6 Audits and Examination of Records. The District may examine and audit at no additional cost to the District all books, estimates, records, contracts, documents, bid documents, bid cost data, subcontract job cost reports and other Project related data of the Contractor, subcontractors engaged in performance of the Work, and suppliers providing supplies, equipment and other materials required for the Work, including computations and projections related to bidding, negotiating, pricing or performing the Work or contract modifications and other materials concerning the Work, including, but not limited to, Contractor daily logs, in order to evaluate the accuracy, completeness, and currency of cost, pricing, scheduling and any other project related data. The Contractor will make available all such Project related data at all reasonable times for examination, audit, or reproduction at the Contractor's business office at or near the Work site, and at any other location where such Project related data may be kept until

three years after final payment under the Agreement. Pursuant to California Government Code Section 8546.7, if the amount of public funds to be expended is in excess of $10,000, this Agreement shall be subject to the examination and audit of the State Auditor, at the request of the District, or as part of any audit of the District, for a period of three (3) years after final payment under the Agreement.

3.7 Advertising. No advertising signs of any kind may be displayed on the Work site, or on fences, offices or elsewhere adjacent to the Work site.

3.8 Project Schedule. Within seven (7) calendar days of the Notice to Proceed, the Contractor shall submit a schedule showing each task of Work, the sequence of each task, the number of days required to complete each task, and the critical path controlling the completion of the entire Work. The schedule shall allow for the completion of the entire Work within the Time for Completion.

3.8.1 District Review of Schedule. The District may review the Contractor's submitted schedule and may note any exceptions. The Contractor shall correct any exceptions noted by the District within five (5) working days of being notified of the exceptions.

3.8.2 Update of Schedule. After submission of a schedule to which the District has taken no exceptions, the Contractor shall submit an updated schedule on a biweekly basis until completion of the Work. The updated schedule shall show the progress of Work as of the date specified in the updated schedule.

3.8.3 Float. The schedule shall show early and late completion dates for each task. The number of working days between these dates shall be designated as "float". The Float shall be designated to the Project and shall be available to both the District and the Contractor as needed.

3.8.4 Failure to Submit Schedule. If the Contractor fails to submit the schedule within the time period specified in Section 3.8, or the updated schedule as specified in Section 3.8.2, or submit a schedule to which the District has taken uncorrected exceptions, **the District shall be entitled to withhold payment for the next application for payment submitted after the schedule or updated schedule becomes late.**

3.8.5 Responsibility for Schedule. The Contractor shall have sole and exclusive responsibility for creating the schedule and properly updating it. The District has no authority to approve the schedule. The District may note exceptions to any schedule submitted by the Contractor. However, it shall be the Contractor's sole responsibility to determine the proper method to address exceptions and the District's review of the schedule shall not serve to place any such obligation on the District.

4. CHANGES IN WORK

4.1 District Directed Change Orders. The District may at any time during the progress of the Work direct any amendments to the Work or any of the Contract Documents, including, but not limited to the Technical Specifications, or Drawings. Such amendments will in no way void the agreement, but will be applied to amend the

Contract Price, if such amendments affect the Contract Price, the Project schedule, if such amendments affect the Project schedule, or any other provision of the Contract Documents based on a fair and reasonable valuation of the amendment in accordance with this Section 4.

4.2 Writing Requirement. Change orders and other amendments to the Technical Specifications, the Drawings, or other Contract Documents may be made only by a writing executed by authorized representatives of the District and the Contractor.

4.3 Contractor Proposed Change Orders. Unless the District Engineer otherwise authorizes or the District and the Contractor otherwise agree, change order proposals submitted by the Contractor must be submitted to the District Engineer no later than the time of the proposed change.

4.4 All Change Orders. All change order proposals must be submitted on completed Change Order forms provided in the Contract Documents. All such change order proposals must itemize all cost impacts of the proposed change order and include a total price for that change order and the amended Contract Price that would become effective upon execution of the change order. All change order proposals must specify any change in the Project schedule, or in any project milestone including, but not limited to, the Time for Completion, under the change order. It is understood that change orders that do not specify a change in any milestone, including, but not limited to, the Time for Completion, may be accomplished by the Time for Completion then in effect.

4.5 Change Order Pricing. Change order pricing will be governed by the following:

4.5.1 Unit prices specified in the Contract Documents will apply to cost impacts involving items for which the Contract Documents specify unit prices.

4.5.2 Cost impacts involving items for which no unit prices are specified will be calculated by adding the itemized actual direct cost that would be added or reduced under the change order and an allowance for indirect costs in accordance with this Section. Itemization for direct costs for required labor must include the classifications of labor required, the total hours required for each classification, the hourly rate for each classification and other labor related costs such as liability and workers compensation insurance, social security, retirement and unemployment insurance. All other cost impacts for which no unit prices are specified must be itemized as appropriate, including the cost of tools, vehicles, phones and other equipment, and the cost of all required materials or supplies. Indirect costs added under a change order may not exceed an allowance of fifteen (15) percent of the total of combined Contractor and subcontractor direct costs added under the change order. Such allowance covers Contractor overhead and profit under the change order and includes the cost of insurance in addition to that required pursuant to Section 8.8, bond premiums, superintendent labor, clerical labor, home office expenses, worksite office expenses, and utility costs under the change order. Such costs may not be itemized as direct costs under a change order. Indirect costs deducted under a change order will be calculated in exactly the same way as indirect costs added under a change order, except indirect costs deducted under a change order may not exceed an allowance of seven and a half (7.5) percent of

the total of combined Contractor and subcontractor direct costs deducted under the change order.

4.6 Liability Under Unapproved Change Orders. The Contractor shall be solely responsible for any and all losses, costs, or liabilities of any kind incurred by the Contractor, any subcontractor engaged in the performance of the Work, any party supplying material or equipment for the Work or any third party that are incurred pursuant to Contractor-proposed change orders prior to issuance of an approved change order executed in accordance with this Section 4. The Contractor will have all of the obligations and the District will have all of the rights and remedies that are specified in Section 11 concerning any work or resulting losses, costs, or liabilities pursuant to a Contractor proposed change order before issuance of an approved change order executed in accordance with this Section 4.

4.7 Changes Subject to Contract Documents. Any changes in the Work and/or the Contract Documents pursuant to change orders and any other amendments issued in accordance with the Contract Documents, including this Section 4, will in all respects be subject to all provisions of the Contract Documents, including, but not limited to, the Technical Specifications and the Drawings, except as modified by such change orders or amendments.

4.8 Change Order Disputes.

4.8.1 Disputed District Directed Change Orders. If the Contractor disputes a District directed change order following a reasonable effort by the District and the Contractor to resolve the dispute including, at a minimum, a meeting between appropriate representatives of the Contractor and the District, the Contractor must commence performing the Work consistent with the disputed change order within five (5) working days of the last meeting between representatives of the Contractor and the District to resolve the dispute, or within the time specified in the disputed District directed change order, whichever is later. In performing Work consistent with a disputed District-directed change order pursuant to this provision the Contractor will have all of the Contractor's rights concerning claims pursuant to the Contract Documents and applicable law.

4.8.2 Disputed Contractor Proposed Change Orders. If the District disputes a Contractor proposed change order, the District and the Contractor will use reasonable efforts to resolve the dispute including, at a minimum, holding a meeting between appropriate representatives of the Contractor and the District. Regardless of and throughout any such efforts to resolve the dispute the Contractor must continue performing the Work irrespective of and unmodified by the disputed change order. In continuing to perform the Work, the Contractor will retain all of the Contractor's rights under contract or law pertaining to resolution of disputes and protests between contracting parties. Disputes between the District and the Contractor concerning any Contractor-proposed change order or other amendment do not excuse the Contractor's obligation to perform the Work in accordance with the Contract Documents excluding such Contractor-proposed change order or other amendment by the Time for Completion or waive any other Project milestone or other requirement of the Contract Documents.

5. TRENCHING AND UTILITIES

5.1 Excavation More Than Four Feet Deep. In accordance with California Public Contract Code Section 7104, if the Work involves excavation more than four feet deep the Contractor must promptly notify the District in writing before disturbing: any material that the Contractor believes may be hazardous waste, as defined in Section 25117 of the Health and Safety Code, that is required to be removed to a Class I, Class II or Class III disposal site in accordance with provisions of existing law; any subsurface or latent physical conditions at the Work site differing from those indicated; or any unknown physical conditions at the Work site of any unusual nature, different materially from those ordinarily encountered and generally recognized as inherent in work of the character provided for in the Contract Documents. The District will promptly investigate any such conditions for which notice is given. If the District finds that the conditions do materially differ, or involve hazardous waste, and would cause a decrease or increase in the cost or time of performance of the Work, the District will issue a change order pursuant to Section 4 of these General Conditions. If a dispute arises between the District and the Contractor concerning whether the conditions materially differ, or involve hazardous waste, or cause a decrease of increase in the cost or time of performance, the Contractor will not be excused from any completion date provided in the Contract Documents, but shall proceed with all Work to be performed. The Contractor will retain all rights under contract or law pertaining to resolution of disputes and protests between contracting parties.

5.2 Excavation of Five Feet or More. In accordance with California Labor Code Section 6705, contractors performing contracts exceeding $25,000 in cost and involving excavation five or more feet deep must submit for the District's acceptance, prior to excavation, a detailed plan showing the design of shoring, bracing, sloping, or other provisions to be made for worker protection from the hazard of caving ground during excavation. If the plan varies from the shoring system standards, it must be prepared by a registered civil or structural engineer.

5.3 Existing Utilities.

5.3.1 General – The location of known existing utilities and pipelines are shown on the Plans in their approximate locations. However, nothing herein shall be deemed to require the District to indicate the presence of existing service laterals or appurtenances whenever the presence of such utilities on the site of the project can be inferred from the presence of other visible facilities, such as buildings, cleanouts, meter and junction boxes, on or adjacent to the site of the Project.

The District will assume the responsibility for the timely removal, relocation, or protection of existing main or trunk line utility facilities located on the Project site if such utilities are not identified by the District in the Contract Documents or which cannot reasonably be inferred from the presence of other visible facilities.

5.3.2 Utility Location – It shall be the Contractor's responsibility to determine the exact location and depth of all utilities, including service connections, which have been marked by the respective utility owners and which the Contractor believes may affect or be affected by the Contractor's operations. The Contractor shall not be entitled to additional compensation nor time extensions

for work necessary to avoid interferences nor for repair to damaged utilities if the Contractor does not expose all such existing utilities as required by this section.

The locating of utilities shall be in conformance with Government Code Section 4216 et seq. except for the District's utilities located on the District's property and not on public right-of-way.

A "High Priority Subsurface Installation" is defined in Section 4216 (e) as "high-pressure natural gas pipelines with normal operating pressures greater than 415kPA gauge (60psig) or greater than six inches nominal pipe diameter, petroleum pipelines, pressurized sewage pipelines, high-voltage electric supply lines, conductors, or cables that have a potential to ground of greater than or equal to 60kv, or hazardous materials pipelines that are potentially hazardous to workers or the public if damaged."

A "Subsurface Installation" is defined in Section 4216 (l) as "any underground pipeline, conduit, duct, wire, or other structure, except non-pressurized sewer lines, non-pressurized storm drains, or other non-pressurized drain lines."

Pursuant to Government Code Section 4216.2 the Contractor shall contact the appropriate regional notification center at least two (2) working days but not more than fourteen (14) calendar days before performing any excavation. The Contractor shall request that the utility owners conduct a utility survey and mark or otherwise indicate the location of their service. The Contractor shall furnish to the Construction Manager written documentation of its contact(s) with the regional notification center prior to commencing excavation at such locations.

After the utility survey is completed, the Contractor shall commence "potholing" or hand digging to determine the actual location of the pipe, duct, or conduit. The Construction Manager and District Engineer shall be given notice prior to commencing potholing operations. The Contractor shall uncover all piping and conduits, to a point one (1) foot below the pipe, where crossings, interferences, or connections are shown on the Drawings, prior to trenching or excavating for any pipe or structures, to determine actual elevations. New pipelines shall be laid to such grade as to clear all existing facilities, which are to remain in service for any period subsequent to the construction of the run of pipe involved.

The Contractor's attention is directed to the requirements of Government Code Section 4216.2 (a)(2) which provides: "When the excavation is proposed within 10 feet of a high priority subsurface installation, the operator of the high priority subsurface installation shall notify the excavator of the existence of the high priority subsurface installation prior to the legal excavation start date and time, as such date and time are authorized pursuant to paragraph (1) of subdivision (a) of 4216.2. The excavator and the operator or its representative shall conduct an onsite meeting at a mutually-agreed-on time to determine actions or activities required to verify the location of the high priority subsurface installation prior to start time." The Contractor shall notify the Construction Manager and District Engineer in advance of this meeting.

5.3.4. Utility Relocation and Repair – If interferences occur at locations other than those indicated in the Contract Documents with reasonable accuracy, the Contractor shall notify the Construction Manager and District Engineer in writing. The Construction Manager will supply a method for correcting said interferences in accordance with the responsibilities of this section and Government Code Section 4215.

Care shall be exercised by the Contractor to prevent damage to adjacent existing facilities and public or private works; where equipment will pass over these obstructions, suitable planking shall be placed. If high priority subsurface installations are damaged and the operator cannot be contacted, the Contractor shall call 911 emergency services.

The District will compensate the Contractor for the costs of locating and repairing damage not due to the failure of the Contractor to exercise reasonable care, and for removing or relocating such main or trunk line utility facilities not indicated in the Contract Documents with reasonable accuracy, and for the cost of equipment on the Project necessarily idled during such work. The payment for such costs will be made as provided in Section 4, Change Orders. The Contractor shall not be assessed liquidated damages for delay in completion of the Project, when such delay is caused by the failure of the District or utility company to provide for removal or relocation of such utility facilities.

The public utility, where they are the owner of the effected utility, shall have the sole discretion to perform repairs or relocation work or permit the Contractor to do such repairs or relocation work at a reasonable price. The right is reserved to the District and the owners of utilities or their authorized agents to enter upon the Work area for the purpose of making such changes as are necessary for the rearrangement of their facilities or for making necessary connections or repairs to their properties. The Contractor shall cooperate with forces engaged in such work and shall conduct its operations in such a manner as to avoid any unnecessary delay or hindrance to the work being performed by such forces and shall allow the respective utilities time to relocate their facility.

When the Contract Documents indicate that a utility is to be relocated, altered or constructed by others, the District will conduct all negotiations with the utility company and the work will be done at no cost to the Contractor, unless otherwise stipulated in the Agreement.

Temporary or permanent relocation or alteration of utilities desired by the Contractor for its own convenience shall be the Contractor's responsibility and it shall make arrangements and bear all costs for such work.

6. PROJECT FACILITIES

6.1 Work Site Offices. Any Work site office facilities used by the Contractor and/or its privities must conform to all applicable codes, ordinances, and regulations. The cost of such Work site office facilities shall be paid from the included in the Contract Price.

6.2 District Rights of Access and Ownership. The District and its authorized representatives will at all reasonable times while such office facilities are located at the Work site (including, at a minimum, all times during which the Work is performed), have access to any such Work site office facilities used by the Contractor and/or its privities. With respect to the right of access of the District and its authorized representatives, neither the Contractor nor its privities shall have a reasonable expectation of privacy pursuant to the Fourth Amendment to the Unites States Constitution or other applicable law concerning such Work site office facilities used by the Contractor and/or its privities. Without exception, any and all Project related materials located at such Work site facilities will be deemed at all times to be District property subject to inspection and copying by the District and its authorized representatives at all reasonable times while such facilities are located at the Work site (including, at a minimum, all times during which the Work is performed). Any interference by the Contractor or its privities with the District's rights of access and/or ownership pursuant to this Section 6 will constitute a material breach of the Agreement subject to any and all remedies available pursuant to the Contract Documents and at law and equity.

7. PROSECUTION AND PROGRESS OF THE WORK

7.1 Liquidated Damages. Time is of the essence in the Agreement. The District and the Contractor agree that it will be difficult and/or impossible to determine the actual damage which the District will sustain in the event of the Contractor's failure to fully perform the Work or to fully perform all of the Contractor's obligations that have accrued pursuant to the Agreement by the Time for Completion. Accordingly, the District and the Contractor agree in accordance with California Government Code Section 53069.85 that the Contractor will forfeit and pay to the District liquidated damages in the sum of $1,000 per day for each and every calendar day completion of the Work and/or performance of all of the Contractor's obligations that have accrued pursuant to the Agreement is delayed beyond the Time for Completion. The District and the Contractor further agree in accordance with California Government Code Section 53069.85 that the liquidated damages sum specified in this provision is not manifestly unreasonable under the circumstances existing at the time the Agreement was made, and that the District may deduct liquidated damages sums in accordance with this provision from any payments due or that may become due the Contractor under the Agreement.

7.2 No Damage for Delay Beyond District and Contractor Control. The Contractor will not be held responsible for delays in performance of the Work caused by delay beyond the control of both District and Contractor, such as by strikes, lockouts, or labor disturbances that are not within the control of the contractor to resolve, lack or failure of transportation, or acts of other government entities. This provision will not apply where the delay would not have occurred but for a previous contractor caused delay in the prosecution of the Work. The District will not be liable to the Contractor, any subcontractor or other entity engaged in the performance of the Work, any supplier, or any other person or organization, or to any surety or employee or agent of any of them, for damages arising out of or resulting from (i) delays beyond the control of the District and the Contractor including but not limited to fires, floods, epidemics, abnormal weather conditions, earthquakes and acts of God or acts or neglect by utility owners or other contractors performing other work, or (ii) delays caused by the District,

its officials, officers, employees, agents, or volunteers, or delays caused by the District Engineer or the Architect or Engineer, which delays are reasonable under the circumstances involved and/or are within the contemplation of the District and the Contractor. An extension of the Time for Performance in an amount equal to the time loss due to such delay(s) will be the Contractor's sole and exclusive remedy for such delay(s).

7.3 No Damage for Contractor Caused Delay. Contractor shall not be entitled to additional compensation for extended field or home office overhead, field supervision, costs of capital, interest, escalation charges, acceleration costs or other impacts for any delays to the extent such delays are caused by the failure of the Contractor or any subcontractor or other entity engaged in performance of the Work to perform the Work in accordance with the Contract Documents. Contractor may be eligible for additional compensation in excess of the Contract Price for delays caused by the District and/or its privities.

7.4 No Damage for Other Delay. Contractor will not be entitled to damages for delay to the Work caused by the following, which the District and Contractor agree will be deemed for purposes of California Public Contract Code Section 7102 either not caused by the District, and/or within the contemplation of the District and the Contractor, and/or reasonable under the circumstances:

7.4.1 Exercise of the District's right to sequence the Work in a manner that would avoid disruption to the District and other contractors based on: the failure of the Contractor or any subcontractor or other entity engaged in the performance of the Work to perform the Work in accordance with the Contract Documents, enforcement by the District or any other governmental agency of competent jurisdiction of any government act or regulation, or enforcement by the District of any provisions of the Agreement.

7.4.2 Requests for clarification or information concerning the Contract Documents or proposed change orders or modifications to the Contract Documents, including extensive and/or numerous such requests for clarification or information or proposed change orders or modifications, provided such clarifications or information or proposed change orders or modifications are processed by the District or its representatives in a reasonable time in accordance with the Contract Documents.

7.5 Delays Caused by the District and/or Its Privities. Either the District or the Contractor may propose a change in the Time for Completion for delays that are purported to be caused by the District and/or its privities and that are not reasonable under the circumstances involved and/or that are not within the contemplation of the District and the Contractor. Such proposed changes in the Time for Completion will constitute change order proposals subject to Section 4. In accordance with Section 4, the District and the Contractor may agree upon pricing for the cost impacts, if any, resulting from such delays. If such pricing is in anticipation of cost impacts that may, but have not yet occurred, the District will be obligated to pay the Contractor for such anticipated impacts in accordance with the Agreement and any applicable, approved change orders only to the extent the Contractor actually incurs the anticipated cost impacts. Notwithstanding anything to the contrary in Section 4.5.2, the District and the Contractor may agree to a daily rate or cap or lump sum that will apply to the cost

impacts, if any, resulting from delay purportedly caused by the District and/or its privities subject to this provision. However, if such daily rate or cap or lump sum is in anticipation of cost impacts that have not yet occurred, the District will be obligated to pay such daily rate or cap or lump sum only to the extent the Contractor actually incurs such cost impacts.

7.5.1 Weather Delays. Extensions of the Time for Completion will not be allowed for weather conditions that are consistent with the following list of anticipated rain days based on historical weather data of the National Oceanographic and Atmospheric Administration of the U.S. Department of Commerce for the record station that is nearest or most applicable to the Work site. Extensions of the Time for Completion for delays due to adverse weather will be allowed only if the number of rain days exceeds those listed in the following table and the Contractor can verify to the District's reasonable satisfaction that such adverse weather caused actual delay in the timely completion of the Work. No extensions of the Time for Completion will be granted for rain days in addition to those listed in the following table that merely result in delays that do not or would not, themselves, result in failure to complete the Work by the Time for Completion. Anticipated weather delays, which may include rain, strong wind, or other types of inclement weather conditions, are as follows:

August through October:	4 days
November through April:	40 days
May through July	4 days

7.6 Delay Claims. Whenever the Contractor claims a delay for which the Time for Completion may be extended, the Contractor must request an extension of time within five (5) working days of the start of the delay. The request must be in writing and describe in detail the cause for the delay, and, if possible, the foreseeable extent of the delay.

7.7 Contractor Coordination of the Work.

7.7.1 The District reserves the right to do other work in connection with or in the vicinity of the Project by contract or otherwise, and Contractor shall at all times conduct the Work so as to impose no hardship on the District, others engaged in the Work or other contractors working at the Work site. The Contractor will adjust, correct and coordinate the Work with the work of others so that no delays result in the Work or other work at or near the Work site.

7.7.2 If any part of the Work depends for proper execution or results upon the work of the District or any other contractor, the Contractor will, before proceeding with such Work, promptly report to the District any apparent discrepancies or defects in such other Work. Failure of the Contractor to promptly report any apparent discrepancy or defect will be deemed an acceptance of the District's or other contractor's Work as fit and proper.

7.7.3 The Contractor will anticipate the relations of the various trades to the progress of the Work and will ensure that required anchorage or blocking is furnished and set at proper times. Anchorage and blocking necessary for each trade shall be part of the Work except where stated otherwise.

7.7.4 The Contractor will provide proper facilities at all times for access of the District, the District Engineer, Architect or Engineer, and other authorized District representatives to conveniently examine and inspect the Work.

7.8 Suspension of Work

7.8.1 If the Contractor fails to correct defective work, or fails to carry out the Work in accordance with the Contract Documents or any other applicable rules and regulations, the District, by a written order of the District 's representative or signed personally by an agent specifically so empowered by the District, in writing, may order the Contractor to stop the work, in its entirety or any portion thereof. In the event of a suspension of only a portion of the work, the Contractor is obligated to perform the portion of the work not suspended. The Suspension of Work shall remain in effect until the condition or cause for such order has been eliminated. The District's concurrence that the condition or cause has been eliminated will be provided to the Contractor in writing. This right of the District to stop and suspend the Work shall not give rise to any duty on the part of the District to exercise this right for the benefit of the Contractor or any other person or entity. All delays in the Work occasioned by such stoppage shall not relieve the Contractor of any duty to perform the Work or serve to extend the time for its completion. Any and all necessary corrective work done in order to comply with the Contract Documents shall be performed at no cost to the District.

7.8.2 In the event that a suspension of Work is ordered, as provided in this paragraph, the Contractor, at its expense, shall perform all work necessary to provide a safe, smooth, and unobstructed passageway through construction for use by public, pedestrian, and vehicular traffic, during the period of such use by suspension. Should the Contractor fail to perform the Work as specified, the District may perform such work and the cost thereof may be deducted from partial payments and/or final payment due the Contractor under the Contract.

7.8.3 The District shall also have authority to suspend the Work wholly or in part, for such period as the District may deem necessary, due to unsuitable weather, or to such other conditions as are considered unfavorable for the suitable prosecution of the Work. Such temporary suspension of the Work will be considered justification for time extensions to the Contract in an amount equal to the period of such suspension if such suspended work includes the current critical activity on the latest favorably reviewed progress schedule. The Contractor as directed by the District shall comply with the provisions in Section 7.8.2 above. Such additional work shall be compensated as provided for in Section 4, Changes in Work.

8. CONTRACTOR RESPONSIBILITIES

8.1. Eligibility. By executing the Agreement, the Contractor certifies that the Contractor is not ineligible to perform work on public works projects pursuant to California Labor Code Sections 1777.1 or 1777.7. In accordance with California Public Contract Code Section 6109(a), contractors who are ineligible to perform work on public works

projects pursuant to California Labor Code Sections 1777.1 or 1777.7 may neither bid on, be awarded or perform the Work. The Contractor shall hold harmless and indemnify the District from and against any and all damages, costs, and liability arising from or as a consequence of any violation of Public Contract Code Section 6109.

8.2 Supervision of the Work. The Contractor will be solely responsible for the performance of the Work, including portions of the Work to be performed by subcontractors. The Contractor is charged with ensuring that all orders or instructions from the District, District Engineer or Architect are disseminated to and followed by all subcontractors engaged in performance of the Work. The Contractor will supervise the Work using the Contractor's best skill and attention. At any time during the progress of the Work, the District, the District Engineer, or the Architect may require the Contractor and/or subcontractors engaged in performance of the Work to attend a project meeting and the Contractor will attend, and ensure the attendance of any subcontractors whose attendance is required by the District and/or advisable in light of the matters to be addressed at the meeting.

8.3 Contractor's Superintendent. The Contractor will keep on the Work, throughout its progress, a competent superintendent and any necessary assistants, all satisfactory to the District. The superintendent may not be changed without the consent of the District. The superintendent will represent the Contractor and all directions given by the District to the superintendent will bind the Contractor in accordance with the Agreement. Superintendent time included in Contractor's completed Bid Schedule and/or in approved change orders, if any, must be included in Contractor's approved overhead rate and may not be charged as a direct cost.

8.4 Competent Employees. The Contractor must at all times enforce strict discipline and good order among the Contractor's employees and may not employ on the Work any unfit person or anyone not skilled in the Work assigned, or anyone incompetent or unfit for the duties of that person. When the District determines that a Contractor employee does not satisfy the requirements of this provision, upon notice from the District, the Contractor must ensure that employee performs no further Work and is no longer present at the Work site. Any such Contractor employee may not again be employed on the Work without District approval.

8.5 Items Necessary for Proper Completion of the Work. Except as otherwise noted in the Contract Documents, the Contractor will provide and pay for all labor, materials, equipment, permits, fees, licenses, facilities and services necessary for the proper execution and timely completion of the Work in accordance with the Contract Documents.

8.6 Construction Reports. The Contractor must submit daily construction reports detailing the daily progress of the Work to the District Engineer on a weekly basis.

8.7 Subcontracting.

8.7.1 By executing the Agreement, the Contractor certifies that no subcontractor included on the list of proposed subcontractors submitted with the Contractor's bid is ineligible to perform work on public works projects pursuant to California Labor Code Sections 1777.1 or 1777.7. In accordance with California Public Contract Code Section 6109(a), subcontractors who are ineligible to perform

work on public works projects pursuant to California Labor Code Sections 1777.1 or 1777.7 may neither bid on, be awarded or perform as a subcontractor on the Work. In accordance with California Public Contract Code Section 6109(b), any contract on a public works project entered into between a contractor and a debarred subcontractor is void as a matter of law. The Contractor will ensure that no debarred subcontractor receives any public money for performing the Work, and any public money that may have been paid to a debarred subcontractor for the Work is returned to the District. The Contractor will be responsible for payment of wages to workers of a debarred subcontractor who has been allowed to perform the Work.

8.7.2 The Agreement and the performance of the Work are subject to the requirements of the Subletting and Subcontracting Fair Practices Act codified at California Public Contract Code Section 4100 and following. If the Contractor fails to specify a subcontractor or specifies more than one subcontractor for the same portion of the Work in excess of one-half of 1 percent of the Contractor's total bid, the Contractor agrees that the Contractor is fully qualified to perform that portion of the Work with the Contractor's own forces, and that the Contractor will perform that portion of the Work with the Contractor's own forces. If after award of the Agreement the Contractor subcontracts, except as provided for in California Public Contract Code Sections 4107 or 4109, any such portion of the Work, the Contractor will be subject to the penalties set forth in California Public Contract Code Sections 4110 and 4111, including cancellation of the Agreement, assessment of a penalty of up to 10 percent of the amount of the subcontract, and disciplinary action by the Contractors State License Board.

8.7.3. No contractual relationship exists between the District and any subcontractor engaged in performance of the Work.

8.7.4 Incorporation of Contract Documents. The Contractor must incorporate the Contract Documents in each contract with a subcontractor engaged in the performance of the Work. The Contractor shall be solely responsible for any delay or additional costs incurred as a result of its failure to provide adequate or accurate project information to a subcontractor that results in improper submittals and/or work, or time or other impacts is the sole responsibility of the Contractor. The Contractor will have all of the obligations and the District will have all of the remedies that are specified in Section 11.

8.7.5 Coordination of Subcontract Work: The Contractor is responsible for scheduling the Work of subcontractors so as to avoid delay or injury to either Work or materials.

8.8 Insurance.

8.8.1 All required insurance shall be provided in the form of "occurrence"-type policies underwritten by admitted insurers in the State of California with a current A.M. Best rating of no less than A: VII, unless otherwise acceptable to the District. All policies must be issued at the expense of the Contractor and must be maintained at the Contractor's expense throughout the performance of the Work. Coverage should be maintained for a minimum of five (5) years after contract completion.

8.8.2 The Contractor and any subcontractors engaged in performance of the Work must secure payment of workers compensation in accordance with California Labor Code Section 3700 and other applicable law. The Contractor must verify that all Subcontractors comply with this requirement.

8.8.3 Within seven (7) calendar days following Notice of Award the Contractor must submit to the District along with executed copies of all other documents specified in the Contract Check List certificates of insurance and endorsements evidencing that the Contractor has in effect and will maintain throughout the performance of the Work the following kinds and amounts of insurance:

8.8.3.1 Worker's Compensation Insurance. In accordance with the provisions of Article 5, Chapter 1, Part 7, Division 2 (commencing with Section 1860) and Chapter 4, Part 1, Division 4 (commencing with Section 3700) of the Labor Code of the State of California, the Contractor is required to secure the payment of compensation to its employees and for that purpose obtain and keep in effect adequate Workers' Compensation Insurance. If the Contractor, in the sole discretion of the District, satisfies the District of the responsibility and capacity under the applicable Workers' Compensation Laws, if any, to act as self-insurer, the Contractor may so act, and in such case, the insurance required by this paragraph need not be provided. The Contractor is advised of the provisions of Section 3700 of the Labor Code, which require every employer to be insured against liability for Workers' Compensation or to undertake self-insurance in accordance with the provisions of that code, and shall comply with such provisions and have Employers' Liability limits of **$1,000,000** per accident and per employee, and in the aggregate for injury by disease, before commencing the performance of the work of this Contract. Before the Notice to Proceed with the Work under this Contract is issued, the Contractor shall submit written evidence that the Contractor has obtained for the period of the Contract Workers' Compensation and Employer's Liability Insurance as required for all persons whom it employs or may employ in carrying out the work under this Contract. Such evidence of coverage shall be accompanied by an endorsement from the insurer agreeing to waive all rights of subrogation against the District, its officers, officials, employees, agents and volunteers, the Design Consultants, the Construction Manager and their agents, consultants and employees which might arise by reason of any payment under the policy. This insurance shall be in accordance with the requirements of the most current and applicable State Workers' Compensation Insurance Laws.

8.8.3.2 Commercial General Liability and Automobile Liability Insurance - This insurance shall protect the Contractor from claims for bodily injury, personal injury and property damage which may arise because of the nature of the work or from operations under this Contract. The Commercial General Liability Insurance shall be maintained for five (5) years after final completion and shall provide coverage on an occurrence basis.

a. Additional Insureds - The Commercial General Liability and Automobile Policies of insurance shall include as additional insureds or be endorsed to contain the following provisions the "entities" listed below and each of their partners, officers, officials, employees, agents and volunteers are to be covered as insureds as respects: liability arising out of activities performed by or on behalf of the Contractor; products and completed operations of the Contractor; premises owned, occupied or used by the Contractor and or automobiles owned, leased, hired or borrowed by the Contractor. The coverage shall contain no special limitation on the scope of protection afforded to the "entities" and each of their partners, officers, officials, employees, agents and volunteers and coverage provided to such additional insured. This policy shall provide coverage to each of the said insureds with respect to said work. Said policy shall provide primary coverage to the full limit of liability stated in the declarations.

Las Gallinas Valley Sanitary District
300 Smith Ranch Road
San Rafael, CA 94903

Construction Manager: (To be selected by the District later.)
District Consultants: (To be selected by the District later.)
Other Public Agencies Having Jurisdiction

b. (1) Amount of Coverage (General Contractor) - The bodily injury, personal injury and property damage liability of the Commercial General Liability insurance shall provide coverage in the following limits of liability: **$5,000,000** on account of anyone occurrence for bodily injury and property damage, **$5,000,000** personal and advertising injury limit with an annual general aggregate limit of not less than **$5,000,000**, and **$5,000,000** products and completed operations aggregate, combined single limit. The Automobile Liability insurance policy shall provide minimum limits of **$5,000,000** per accident for bodily injury and property damage and **$5,000,000** policy aggregate arising out of the ownership, maintenance, or use of any owned or non-owned vehicles.

(2) Amount of Coverage for Subcontractors - The bodily injury, personal injury and property damage liability of the Commercial General Liability insurance shall provide coverage in the following limits of liability: **$3,000,000** on account of anyone occurrence for bodily injury and property damage **$3,000,000** personal and advertising injury limit with an annual general aggregate limit of not less than **$3,000,000**, and **$3,000,000** products and completed operations aggregate, combined single limit. The Automobile Liability insurance policy shall provide minimum limits of **$3,000,000** per accident and **$3,000,000** policy aggregate arising out of the ownership, maintenance, or use of any owned or non-owned vehicles.

c. Subcontractors - The bodily injury and property damage liability insurance shall not be deemed to require the Contractor to have its

subcontractors named as insureds in the Contractor's policy, but the policy shall protect the Contractor from contingent liability which may arise from operations of its subcontractors.

d. Included Coverage - The above Commercial General Liability insurance shall also include the following coverage:

- Premises – Operations
- Independent Contractors
- Products - Completed Operations
- Personal Injury - (False Arrest, Libel, Wrongful Eviction, etc.)
- Advertising Injury
- Broad Form Property Damage, Including, Completed Operations
- Separation of Insureds/Cross-Liability Provision
- Duty to Defend all Insureds
- Deletion of any Limitation on Coverage for Bodily Injury or Property Damage Arising out of Subsidence or Soil or Earth Movement
- Separate Aggregate - A provision that the annual general aggregate and the products and completed operations annual aggregate shall apply separately to each project for which Contractor provides services away from premises owned by or rented to Contractor.
- XCU - (Explosion, Collapse, and Underground Damage) is applicable to operations performed by the Contractor or its subcontractors.
- Blanket Contractual Liability

8.8.3.3 Commercial Umbrella Policy. The Commercial policy is to insure losses above General liability, Employers liability, Auto liability, and Contractor's Pollution Legal liability limits. The Contractor may use an umbrella policy to meet the limit requirements of Section 8.8.3.2.b(1). However, any such umbrella/excess policy must be approved by the District and maintain an A.M. Best Rating of no less than A:VII.

8.8.3.4 Builders Risk. (Not Required)

8.8.3.5 Contractor's Pollution Legal Liability. Coverage for liability because of third-party claims for bodily injury and/or property damage, including insurance for remediation costs stemming from pollution incidents resulting from the contractor's operations. The Contractor's Pollution Legal Liability insurance policy shall provide coverage with limits no less than $1,000,000 per occurrence or claim, and $2,000,000 policy aggregate.

8.8.4 For any claims related to this project, the Contractor's insurance coverage shall be primary and non-contributory insurance coverage as respects the District, its officers, officials, employees, and volunteers. Any insurance or self-insurance maintained by the District, its officers, officials, employees, or volunteers shall

be excess of the Contractor's insurance and shall not contribute with it. This requirement shall also apply to any Excess or Umbrella liability policies.

8.8.5 Any deductibles or self-insured retentions must be declared to and approved by the District.

8.8.6 See Appendix section for the required insurance endorsement forms and other requirements.

8.8.7 For each insurance policy required under the Agreement except for the required workers compensation insurance policy, the Contractor must provide endorsements that add the District, its officers, officials, employees, and volunteers, as an additional insured. Such endorsements must: provide that the insurance required to be furnished by the Contractor will be primary as regards the District, its officers, officials, employees, and volunteers, and that the District's insurance will be excess of and not contribute to the insurance required to be furnished by the Contractor; that the District will receive 30-calendar day written notice of any reduction or cancellation of such insurance required to be furnished by the Contractor; and include a severability of interest clause acceptable to the District. Said endorsement shall be at least as broad as Insurance Services Office form number CG20 10 11 85 (Modified).

8.8.8 Contractor hereby grants to District a waiver of subrogation which any insurer may acquire against District, its officers, officials, employees, and volunteers, from Contractor by virtue of the payment of any loss. Contractor agrees to obtain any endorsement that may be necessary to affect this waiver of subrogation, but this provision applies regardless of whether or not the District has received a waiver of subrogation endorsement from the insurer.

8.8.9 The Contractor shall not allow any subcontractor to commence work on its subcontract until all similar insurance required of the subcontractor, except Builder's Risk Insurance, has been obtained and verified by the Contractor and submitted to the Construction Manager for the District's review and records. Subcontractors shall furnish original certificates and required endorsements as verification of insurance coverage. The insurance liability limits specified in Sections 8.8.3.2.a(2), shall also apply for all subcontractors listed in Section LIST OF PROPOSED SUBCONTRACTORS. The Contractor shall designate the required insurance liability limits for all other subcontractors.

8.8.10 Proof of Coverage - Before the Notice to Proceed with the Work under this Contract is issued, the Contractor shall furnish the District with certificate(s) evidencing issuance of all insurance mentioned herein, copies of the policy declaration or information page(s) and additional insured endorsements. The certificate(s) and endorsements for each insurance policy are to be signed by a person authorized by that insurer to bind coverage on its behalf. The endorsements are to be on forms as included in the appendix section or equivalent endorsement forms acceptable to the District. The certificate(s), policy declaration or information page(s), and endorsements are to be received and approved by the District before work commences. Except for the waiver of subrogation rights endorsements, no other endorsements are required for Workers Compensation or Builder's Risk Insurance. Such certificates of

Insurance shall provide that the insurance policy shall be endorsed to state that coverage shall not be suspended, voided, cancelled by either party, reduced in coverage or limits except after thirty (30) calendar days prior written notice by certified mail, return receipt requested, has been given to the District. Contractor shall also provide certificate(s) evidencing renewals of all insurance required herein, at least thirty (30) calendar days prior to the expiration date of any such insurance.

Any deductibles or self-insured retentions must be declared to and approved by the District. At the option of the District, either: the insurer shall reduce or eliminate such deductibles or self-insured retentions as respects the District, the Design Consultants and the Construction Manager and their officers, officials, employees, agents and volunteers; or the Contractor shall procure a bond guaranteeing payment of losses and related investigations, claim administration and defense expenses. In the event of the breach of any provision of this paragraph, or in the event of any notices received which indicates any required insurance coverage will be diminished or canceled, District, at its option, may, notwithstanding any other provisions of this Agreement to the contrary, immediately declare a material breach of this Agreement and suspend all further work pursuant to this Agreement.

8.8.11 Insurance During Guarantee Period

For any construction related work, including, but not limited to, maintenance, service, or repair work performed by the Contractor or its subcontractors during the guarantee period, workers compensation, and commercial general liability insurance in the amounts and format required herein, shall remain in force and shall be maintained for five (5) years after final completion of the contract of work.

8.9 Indemnities.

8.9.1 The Contractor will take all responsibility for the Work, and will bear all losses and damages directly or indirectly resulting to the Contractor, any subcontractors engaged in performance of the Work, the District, its officials, officers, employees, agents, volunteers and consultants, and to third parties on account of the performance or character of the Work, unforeseen difficulties, accidents, or occurrences of other causes predicated on active or passive negligence of the Contractor or of any subcontractor engaged in performance of the Work. To the fullest extent permitted by law the Contractor will indemnify, defend and hold harmless the District, its officials, officers, employees, agents, volunteers and consultants from and against any or all loss, liability, expense, claims, costs (including costs of defense), suits, and damages of every kind, nature and description (including, but not limited to, penalties resulting from exposure to hazards in violation of the California Labor Code) directly or indirectly arising from the performance of the Work (“Claims”).

8.9.2 The Contractor will indemnify, defend and hold harmless the District, the District’s officials, officers, employees, volunteers, agents and the District Engineer and Architect for all liability on account of any patent rights, copyrights, trade names or other intellectual property rights that may apply to the Contractor’s performance of the Work. The Contractor will pay all royalties

or other charges as a result of intellectual property rights that may apply to methods, types of construction, processes, materials, or equipment used in the performance of the Work, and will furnish written assurance satisfactory to the District that any such charges have been paid.

8.9.3 The Contractor assumes all liability for any accident or accidents resulting to any person or property as a result of inadequate protective devices for the prevention of accidents in connection with the performance of the Work. The Contractor will indemnify, defend, and hold harmless the District and its officials, officers, employees, agents, volunteers and consultants from such liability.

8.9.4 Approval of the Contractor's certificates of insurance and/or endorsements does not relieve the Contractor of liability under this Section 8.9. The Contractor will defend, with legal counsel reasonably acceptable to the District, any action or actions filed in connection with any Claims and will pay all related costs and expenses, including attorney's fees incurred. The Contractor will promptly pay any judgment rendered against the District, its officials, officers, employees, agents, volunteers, or consultants for any Claims. In the event the District, its officials, officers, employees, agents, volunteers or consultants is made a party to any action or proceeding filed or prosecuted against Contractor for any Claims, Contractor agrees to pay the District, its officials, officers, employees, agents, volunteers and consultants any and all costs and expenses incurred in such action or proceeding, including but not limited to, reasonable attorneys' fees.

8.9.5 In accordance with California Civil Code Section 2782(a), nothing in the Agreement will be construed to indemnify the District for its sole negligence, willful misconduct, or for defects in design furnished by District. In accordance with California Civil Code Section 2782(b), nothing in the Agreement will be construed to impose on the Contractor or to relieve the District from liability for the District's active negligence. By execution of the Contract Documents the Contractor acknowledges and agrees that the Contractor has read and understands the insurance and other requirements of Agreement, and this Section 8.9, which is a material element of consideration.

8.10 Licenses/Permits. The Contractor must, without additional expense to the District, obtain all licenses, permits and other approvals required for the performance of the Work.

8.11 California Labor Code Requirements.

8.11.1 In accordance with California Labor Code Section 1810, eight (8) hours of labor in performance of the Work shall constitute a legal day's work under the Agreement.

8.11.2 In accordance with California Labor Code Section 1811, the time of service of any worker employed in performance of the Work is limited to eight hours during any one calendar day, and forty hours during any one calendar week, except in accordance with California Labor Code Section 1815, which provides that work in excess of eight hours during any one calendar day and forty hours during any one calendar week is permitted upon compensation for all hours

worked in excess of eight hours during any one calendar day and forty hours during any one calendar week at not less than one-and-one-half times the basic rate of pay. However, if the prevailing wage determination requires a higher rate of pay for overtime than is required under Section 1815, then the overtime rate must be paid, as specified in California Code of Regulation Title 8, Group 3, Section 16200(a)(3)(F).

8.11.3 In accordance with California Labor Code Section 1813, the Contractor and its subcontractors will forfeit as a penalty to the District $25 for each worker employed in the performance of the Work for each calendar day during which the worker is required or permitted to work more than eight (8) hours in any one calendar day, or more than forty (40) hours in any one calendar week, in violation of the provisions of California Labor Code Section 1810 et seq.

8.11.4 In accordance with California Labor Code Section 1773.2, the District has determined the general prevailing wages in the locality in which the Work is to be performed for each craft or type of work needed to be as published by the State of California Department of Industrial Relations, Division of Labor Statistics and Research, a copy of which is on file in the office of the District Engineer and shall be made available on request. The Contractor and subcontractors engaged in the performance of the Work shall pay no less than these rates to all persons engaged in performance of the Work.

8.11.5 In accordance with California Labor Code Section 1775, the Contractor and any subcontractors engaged in performance of the Work must comply with Labor Code Section 1775 which establishes a penalty of up to $200 per day for each worker engaged in the performance of the Work that the Contractor or any subcontractor pays less than the specified prevailing wage. The amount of such penalty shall be determined by the Labor Commissioner. The Contractor or subcontractor shall pay the difference between the prevailing wage rates and the amount paid to each worker for each calendar day or portion thereof for which each worker was paid less than the prevailing wage rate. If a subcontractor worker engaged in performance of the Work is not paid the general prevailing per diem wages by the subcontractor, the Contractor is not liable for any penalties therefore unless the Contractor had knowledge of that failure or unless the Contractor fails to comply with all of the following requirements:

8.11.5.1 The contract executed between the Contractor and the subcontractor for the performance of part of the Work must include a copy of the provisions of California Labor Code Sections 1771, 1775, 1776, 1777.5, 1813, and 1815.

8.11.5.2 The Contractor must monitor payment of the specified general prevailing rate of per diem wages by the subcontractor by periodic review of the subcontractor’s certified payroll records.

8.11.5.3 Upon becoming aware of a subcontractor’s failure to pay the specified prevailing rate of wages, the Contractor must diligently take corrective action to halt or rectify the failure, including, but not limited to, retaining sufficient funds due the subcontractor for performance of the Work.

8.11.5.4 Prior to making final payment to the subcontractor, the Contractor must obtain an affidavit signed under penalty of perjury from the subcontractor that the subcontractor has paid the specified general prevailing rate of per diem wages employees engaged in the performance of the Work and any amounts due pursuant to California Labor Code Section 1813.

8.11.6 In accordance with California Labor Code Section 1776, the Contractor and each subcontractor engaged in performance of the Work, must keep accurate payroll records showing the name, address, social security number, work classification, straight time and overtime hours worked each day and week, and the actual per diem wages paid to each journeyman, apprentice, worker, or other employee employed in performance of the Work. Each payroll record must contain or be verified by a written declaration that it is made under penalty of perjury, stating that the information contained in the payroll record is true and correct and that the employer has complied with the requirements of Sections 1771, 1811, and 1815 for any work performed by the employer's employees on the public works project. The payroll records required pursuant to California Labor Code Section 1776 must be certified and must be available for inspection by the District and its authorized representatives, the Division of Labor Standards Enforcement, and the Division of Apprenticeship Standards of the Department of Industrial Relations and must otherwise be available for inspection in accordance with California Labor Code Section 1776.

8.11.7 In accordance with California Labor Code Section 1777.5, the Contractor, on behalf of the Contractor and any subcontractors engaged in performance of the Work, will be responsible for ensuring compliance with California Labor Code Section 1777.5 governing employment and payment of apprentices on public works contracts.

Apprentices - Prior to commencing the Work, Contractor shall comply with the provisions of Labor Code 1777.5, including but not limited to the submission of contract award information to an applicable apprenticeship program that can supply apprentices to the site of the Work. Such information shall include an estimate of journeyman hours to be performed under this Contract, the number of apprentices proposed to be employed, and the approximate dates the apprentices would be employed. A copy of this information shall be submitted to the District if requested by the District.

A determination by the Chief of the Division of Apprenticeship Standards that Contractor or its subcontractors have knowingly violated Labor Code 1777.5 shall forfeit as a civil penalty an amount not exceeding one hundred dollars ($100) for each full calendar day of noncompliance. Contractor or its subcontractor, who knowingly commits a second or subsequent violation of Labor Code 1777.5 within a three-year period, where the noncompliance results in apprenticeship training not being provided as required, shall forfeit as a civil penalty the sum of not more than three hundred dollars ($300) for each full calendar day of noncompliance. Upon the receipt of a determination that a civil penalty has been imposed by the Chief of the Division of Apprenticeship

Standards, the District shall withhold the amount of the civil penalty from the next progress payment then due or to become due Contractor.

8.11.8 In case it becomes necessary for the Contractor or any subcontractor engaged in performance of the Work to employ on the Work any person in a trade or occupation (except executive, supervisory, administrative, clerical, or other non-manual workers as such) for which no minimum wage rate has been determined by the Director of the Department of Industrial Relations, the Contractor must pay the minimum rate of wages specified therein for the classification which most nearly corresponds to Work to be performed by that person. The minimum rate thus furnished will be applicable as a minimum for such trade or occupation from the time of the initial employment of the person affected and during the continuance of such employment.

8.11.9 Labor Discrimination. Attention is directed to Section 1735 of the Labor Code, which reads as follows:

"No discrimination shall be made in the employment of persons upon public works because of the race, religious creed, color, national origin, ancestry, physical disability, mental disability, medical condition, marital status, sex, age or sexual orientation of such persons, except as provided in Section 12940 of the Government Code, and every contractor for public works violating this section is subject to all the penalties imposed for violation of this chapter."

8.11.10 Receipt of Workers' Wages, Fee for Registering or Placing Persons In Public Works - Attention is directed to the provisions of sections 1778 and 1779 of the California Labor Code, which read as follows:

"Section 1778. Every person, who individually or as a representative of an awarding or public body or officer, or as a contractor or subcontractor doing public work, or agent or officer thereof, who takes, receives or conspires with another to take or receive, for its own use or the use of any other person any portion of the wages of any workman or working subcontractor, in connection with services rendered upon any public work is guilty of a felony."

"Section 1779. Any person or agent or officer thereof who charges, collects, or attempts to charge or collect, directly or indirectly, a fee or valuable consideration for registering any person for public work, or for giving information as to where such employment may be procured, or for placing, assisting in placing, or attempting to place, any person in public work, whether the person is to work directly for the state, or any political subdivision or for a contractor or subcontractor doing public work is guilty of a misdemeanor."

8.12 Laws and Ordinances. The Contractor and all subcontractors engaged in the performance of the Work must conform to the following specific rules and regulations as well as all other laws, ordinances, rules and regulations that apply to the Work. Nothing in the Technical Specifications or Drawings is to be construed to permit Work not conforming to these codes:

National Electrical Safety Code, U. S. Department of Commerce
National Board of Fire Underwriters' Regulations

California Building Standards Code as adopted by the District
Manual of Accident Prevention in Construction, latest edition, published by A.G.C. of America
Industrial Accident Commission's Safety Orders, State of California
Regulations of the State Fire Marshall (Title 19, California Code of Regulation) and Applicable Local Fire Safety Codes
Labor Code of the State of California - Division 2, Part 7, Public Works and Public Agencies.

8.13 Guaranty. The Contractor guarantees all of the Work for one year from the date the District accepts the Work. Upon receiving written notice of a need for repairs which are directly attributable to defective materials or workmanship the Contractor must make good any defects arising or discovered in any part of the Work by diligently commencing the necessary repairs within seven (7) calendar days from the date of notice from the District. If the Contractor fails to make good any defects in the Work in accordance with this provision, in addition to any other available remedy under the contract or at law or equity, the District may make good or have made good such defects in the Work and deduct the cost from amounts that may be due or become due the Contractor, and/or call on the Contractor's maintenance bond for the cost of making good such defects and for the District's reasonable legal costs, if any, of recovering against the bond. The Contractor shall remain responsible for repairing any Work found to be defective regardless of when such defect is discovered by the District. See Drawings for other Guaranty/Warrantee requirements for the project.

8.14 Safety

8.14.1 Contractor's Safety Responsibility - The Contractor shall be solely and completely responsible for conditions of the jobsite, including safety of all persons and property during performance of the Work. This requirement shall apply continuously and not be limited to normal working hours. Safety provisions shall conform to U.S. Department of Labor (OSHA), the California Occupational Safety and Health Act (CalOSHA), and all other applicable Federal, State, County, and local laws, ordinances, codes, including but not limited to the requirements set forth below, and any regulations that may be detailed in other parts of these Contract Documents. In the event of conflicting requirements, the most stringent requirement as it pertains to the Contractor's safety responsibility shall be followed by the Contractor.

No provision of the Contract Documents shall act to make the District, the Construction Manager, Design Consultant or any other party than the Contractor responsible for safety. The Contractor agrees that for purposes of California Labor Code Section 6400 and related provisions of law the Contractor, the Contractor's privities and any other entities acting pursuant to this contract will be "employers" responsible for furnishing employment and a place of employment that is safe and healthful for the employees, if any, of such entities acting pursuant to this contract and that neither the District nor the Construction Manager, Design Consultant or their respective officers, officials, employees, agents or volunteers or other authorized representatives will be responsible for having hazards corrected and /or removed at the location(s) where the work is to be performed. The Contractor agrees that neither the District nor the Construction Manager, Design Consultant or their respective

officers, officials, employees, agents or volunteers or other authorized representatives will be responsible for taking steps to protect the Contractor's employees from such hazards, or for instructing the Contractor's employees to recognize such hazards or to avoid the associated dangers. The Contractor agrees that with respect to the work to be performed under this contract and the location(s) where such work is to be performed, the Contractor will be responsible for not creating hazards, and for having hazards corrected and/or removed. The Contractor agrees that through the safety obligations contained in this contract and the Contractor's own inspection of the site(s) where the contract work is to be performed, the Contractor is aware and has been notified of the hazards to which the Contractor's employees may be exposed in the performance of contract work. The Contractor has taken and/or will take appropriate, feasible steps to protect the Contractor's employees from such hazards, and has instructed and/or will instruct its employees to recognize such hazards and how to avoid the associated dangers. The Contractor agrees that neither the District nor the Construction Manager, Design Consultant or their respective officers, officials, employees, agents or volunteers or other authorized representatives will be “employers” pursuant to California Labor Code Section 6400 and related provisions of law with respect to the Contractor, the Contractor's privities or other entities acting pursuant to this contract.

8.14.2 Review and inspection by the District, the District Engineer, the Architect or Engineer, and/or other representatives of the District of the Contractor's performance of the Work will not constitute review of the adequacy of the Contractor's safety measures in, on, or near the Work site. Such reviews and inspections do not relieve the Contractor of any of the Contractor’s obligations under the Contract Documents and applicable law to ensure that the Work site is maintained, and the Work is performed in a safe manner.

8.14.3 The Contractor will be solely responsible for the implementation and maintenance of safety programs to ensure that the Work site is maintained, and the Work is performed in a safe manner in accordance with the Contract Documents and applicable law.

8.14.4 Safety Plan - Within seven (7) calendar days following Notice of Award the Contractor must submit to the District a copy of the Contractor’s Safety Plan.

The Contractor shall establish, implement, and maintain a written injury prevention program as required by Labor Code Section 6401.7. Before beginning the Work, the Contractor shall prepare and file with the Construction Manager a written Contractor Safety Plan that provides for the implementation of all of the Contractor's safety responsibilities in connection with the Work at the Project site. The coordination of that program and its associated procedures and precautions with safety plans, precautions and procedures of each of its subcontractors and other Contractors performing work at the Project site. The Contractor shall be solely responsible for initiating, maintaining, monitoring, coordinating, and supervising all safety plans, precautions, and procedures in connection with the Work and for coordinating its programs, precautions, and procedures of the other contractors and subcontractors performing the Work at the Project site. The Safety Plan should contain all the necessary elements for the Contractor to administer its program on the Project site. At a minimum, this

written Safety Plan shall address the elements required by Labor Code Section 6401.7.

The Contractor's compliance with requirements for safety and/or the Construction Manager's review of the Contractor's Safety Plan shall not relieve or decrease the liability of the Contractor for safety. The Construction Manager's review of the Contractor's Safety Plan is only to determine if the above listed elements are included in the program.

8.14.5 The Contractor must furnish and place proper guards and systems for the prevention of accidents, including, but not limited to, those systems required pursuant to Title 8, Section 1670 and following of the California Code of Regulations concerning safety belts and nets. The Contractor must provide and maintain any other necessary systems or devices required to secure safety of life or property at the Work site in accordance with accepted standards of the industry and applicable law. The Contractor must maintain during all night hours sufficient lights to prevent accident or damage to life or property.

8.14.6 The Contractor must comply with the District’s Confined Space Entry Program shown in the Appendix section of the Contract Documents.

8.14.7 The Contractor shall indemnify, defend and hold District and Construction Manager, Design Consultant and their respective officers, officials, employees, agents and volunteers or other authorized representatives harmless to the full extent permitted by law concerning liability related to the Contractor’s safety obligations in accordance with the indemnification section of the Contract Documents.

If death or serious injuries or serious damages are caused, the accident shall be reported immediately by telephone or messenger to both the Construction Manager and the District. In addition, the Contractor shall furnish the Construction Manager with a copy of the Employer's Report of Injury immediately following any incident requiring the filing of said report during the prosecution of the Work under this Contract. The Contractor shall also furnish the Construction Manager with a copy of the Employer's Report of Injury involving any subcontractors on this Project. The Contractor shall make all reports as are, or may be, required by any authority having jurisdiction, and permit all safety inspections of the Work being performed under this Contract.

If a claim is made by anyone against the Contractor or any subcontractor on account of any accident, the Contractor shall promptly report the facts in writing to the Construction Manager, giving full details of the claim.

8.14.8 Safety Supervisor - The Contractor shall appoint an employee as safety supervisor who is qualified and authorized to supervise and enforce compliance with the Safety Program. The Contractor shall notify the Construction Manager in writing prior to the commencement of work of the name of the person who will act as the Contractor's Safety Supervisor and furnish the safety supervisor's resume to the Construction Manager.

Contractor will, through and with its Safety Supervisor, ensure that all of its employees, and its subcontractors of any tier, fully comply with the Project Safety Policies. The Safety Supervisor shall be a full-time employee of the Contractor whose responsibility shall be for supervising compliance with applicable safety requirements on the Project site and for developing and implementing safety training classes for all job personnel. The District shall have the authority to require removal of the Contractor's Safety Supervisor if the representative is judged to be improperly or inadequately performing the duties; however, this authority shall not in any way affect the Contractor's sole responsibility for performing this work safely, nor shall it impose any obligation upon the District to ensure the Contractor performs its work safely.

8.14.9 Safety and Protection - The Contractor shall take all necessary precautions to prevent damage, injury, and loss to:

- All employees on the Project, employees of all subcontractors, and other persons and organizations who may be affected thereby;
- All the Work and materials and equipment to be incorporated therein, whether in storage on or off the site; and
- Other property at the site or adjacent thereto, including trees, shrubs, lawns, walks, wetlands, pavements, roadways, structures, utilities, and underground facilities not designated for removal, relocation, or replacement in the course of construction, even if not shown on the Contract Drawings.

The Contractor shall comply with all applicable laws and regulations of any public body having jurisdiction for the safety of persons or property or to protect them from damage, injury or loss and shall erect and maintain all necessary safeguards for such safety and protection. The Contractor shall notify owners of adjacent property and of underground facilities and utility districts when prosecution of the Work may affect them and shall cooperate with them in the protection, removal, relocation, and replacement of their property. All damage, injury or loss to any property caused, directly or indirectly, in whole or in part, by the Contractor, any subcontractor, supplier or any other person or organization directly or indirectly employed by any of them to perform or furnish any of the Work or anyone for whose acts any of them may be liable, shall be remedied by the Contractor, and the Contractor shall be responsible for any direct or indirect costs resulting from such damage, injury or loss.

8.14.10 Excavation Safety - In accordance with the provisions of Section 6705 of the Labor Code, the Contractor shall submit, in advance of excavation of any trench or trenches five feet or more in depth, a detailed plan showing the design of shoring, bracing, sloping, or other provisions to be made for worker protection from the hazard of caving ground during the excavation of such trench or trenches. If such plans vary from the shoring system standards set forth in the Construction Safety Orders of the Division of Industrial Safety in Title 8, Subchapter 4, Article 6, California Code of Regulations, the plans shall be prepared and signed by a registered civil or structural engineer employed by the Contractor, and all costs therefor shall be included in the price named in the Contract for completion of the work as set forth in the Contract Documents. Nothing in this section shall be deemed to allow the use of a shoring, bracing,

sloping, or other protective system less effective than that required by the Construction Safety Orders. Nothing in this section shall be construed to impose a tort liability on the District, the Design Consultant, the Construction Manager, nor any of their officers, officials, employees, agents, consultants or volunteers. The District's review of the Contractor's excavation plan is only for general conformance to the Construction Safety Orders.

Prior to commencing any excavation, the Contractor shall designate in writing to the Construction Manager the "competent person(s)" with the authority and responsibilities designated in the Construction Safety Orders.

8.14.11 Safety Emergencies - In emergencies affecting the safety or protection of persons or the Work or property at the Project site or adjacent thereto, the Contractor, without special instruction or authorization from the Construction Manager, is obligated to act to prevent threatened damage, injury or loss. The Contractor shall give the Construction Manager prompt written notice if the Contractor believes that any significant changes in the Work or variations from the Contract Documents have been caused thereby.

8.14.12 Safety Violations - Should the Contractor fail to correct an unsafe condition, the District shall have the right to notify the Contractor through the Construction Manager that an unsafe condition may exist and must be corrected or the work in question can be stopped in accordance with Section 7.8, Suspension of Work until the condition is corrected to the satisfaction of the District. No extension of time or additional compensation will be granted as a result of any stop order so issued. The notification and suspension of such work or the failure to provide such notification and suspension by the District shall not relieve the Contractor of its sole responsibility and liability for safety and the correction of any unsafe conditions.

The District shall have the authority to require the removal from the project of any worker and the foreman and/or superintendent in responsible charge of the work where safety violations occur.

8.14.13 Equipment Safety Provisions - The completed Work shall include all necessary permanent safety devices, such as machinery guards and similar safety items, required by the State and Federal (OSHA) industrial authorities and applicable local and national codes. Further, any features of the Work, including District -selected equipment, subject to such safety regulations shall be fabricated, furnished, and installed in compliance with these requirements. All equipment furnished shall be grounded and provided guards and protection as required by safety codes. Where vapor-tight or explosion-proof electrical installation is required by safety codes, this shall be provided. Contractors and manufacturers of equipment shall be held responsible for compliance with the requirements included herein. The Contractor shall notify all equipment suppliers and subcontractors of the provisions of this paragraph.

8.14.14 Confined Spaces – The Project requires work in confined spaces and requires compliance with CAL/OSHA and Federal OSHA requirements. Confined spaces for the purposes of this section shall be as defined by the Division of Industrial Safety. Notwithstanding any classifications relative to the

Tunnel Safety Orders, work within confined spaces of this project is subject to the definitions and applicable provisions of Section 5156 et. seq., Title 8, Division 1, Chapter 4, Subchapter 7, Group 16, Article 108 of California Code of Regulations.

Entry into existing “permit” confined spaces as defined by OSHA shall be allowed only in compliance with a confined space entry permit program by the Contractor that meets the requirements of CAL/OSHA Section 5157. While the District has identified certain existing facilities as confined spaces other confined spaces may exist on the Project. It shall be the responsibility of the Contractor to identify and classify these confined spaces.

Sources of ignition, including smoking, shall be prohibited in any confined space.

It is anticipated that the Contractor may encounter hazardous conditions within these confined spaces which include, but are not limited to the following:

A. Exposure to hydrogen sulfide, methane, carbon dioxide and other gases and vapors commonly found in municipal sewers which could have or has the potential of having Immediate Danger to Life or Health Conditions (IDLH).

B. Exposure to atmosphere containing insufficient oxygen to support human life.

C. Exposure to combustible, flammable and/or explosive atmosphere.

D. Exposure to sewage which may contain bacteriological, chemical, and other constituents harmful to humans.

E. Work in conditions where engulfment or entrapment may occur.

F. Work in environments which may be slippery and/or have uneven work surfaces.

G. Work in structures which have limited and/or restricted access and egress.

H. Work in structures where workers may trip, slip and/or fall several feet.

I. See Appendices “Contractor Safe Work Requirements” and “Confined Space Entry Program” for additional requirements. Copies of confined space permits shall be submitted to the District weekly.

8.14.15 Construction Activity Permits - The Contractor must submit a copy of its respective current DOSH permit before beginning work on any the following construction activities:

A. Construction of trenches or excavations which are five feet or deeper and into which a person is required to descend.

B. Construction of any building, structure, scaffolding or falsework more than three stories high or the equivalent height (36 feet).

C. Demolition of any building or structure, or dismantling of scaffolding or falsework more than three stories high or the equivalent height (36 feet).

D. Erection or dismantling of vertical shoring systems more than three stories high, or the equivalent height (36 feet).

8.14.16 Public Safety and Convenience – In accordance with the provisions of Section 6500 of the Labor Code the Contractor shall conduct his work so as to ensure the least possible obstruction to traffic and inconvenience to the general public and the residents in the vicinity of the Work and to ensure the protection of persons and property. No road or street shall be closed to the public except with the permission of the Construction Manager and the proper governmental authority. Fire hydrants on or adjacent to the Work shall be accessible to firefighting equipment. Temporary provisions shall be made by the Contractor to ensure the use of sidewalks, private and public driveways and proper functioning of gutters, sewer inlets, drainage ditches and culverts, irrigation ditches and natural water courses. To the maximum extent permitted by law, Contractor shall indemnify, hold harmless and defend District from any and all liability, including attorneys' fees and costs of litigation, arising from any failure to comply with this section by Contractor or its privities.

8.15 Assignment of Unfair Business Practice Claims. In accordance with California Public Contract Code Section 7103.5, the Contractor and any subcontractors offer and agree to assign to the District all rights, title, and interest in and to all causes of action the Contractor or any subcontractors may have under Section 4 of the Clayton Act (15 U.S.C. § 15) or under the Cartwright Act (Chapter 2 (commencing with § 16700) of Part 2 of Division 7 of the Business and Professions Code), arising from purchases of goods, services or materials pursuant to this contract. This assignment shall be made and become effective at the time the District tenders final payment to the Contractor, without further acknowledgement by the parties.

9. MEASUREMENT AND PAYMENT

9.1 F.O.B. All shipments must be F.O.B. destination to the Work site and/or other sites indicated in the Contract Documents. The Contract Price is all-inclusive (including sales tax). There shall be no additional compensation paid for containers, packing, unpacking, drayage or insurance.

9.2 Payment

9.2.1 On or about the first day of each calendar month the Contractor will submit to the District Engineer a verified application for payment and schedule of values supported by a statement showing all materials actually installed during the preceding month and the cost of labor actually expended in the performance of the Work. Unless otherwise provided in the Contract Documents, no allowances or payments will be made for material or equipment not placed at the Work site.

9.2.2 To be eligible for payment the Contractor's applications for payment must include certified payroll reports prepared in accordance with California Labor Code Section 1776 and the Agreement for each employee of the Contractor and any subcontractors engaged in the performance of the Work during the preceding months, applications for payment will not be processed without certified payroll reports.

9.2.3 In accordance with California Public Contract Code Section 20104.50, the District will review applications for payment as soon as practicable after receipt. Any application or part of an application that is determined to be improper will be returned to the Contractor as soon as practicable, but no later than seven (7) calendar days after receipt by the District, along with a written description of the reasons why the application is improper. The Contractor's failure to submit a schedule in the time specified in Section 3.8, or its submission of a schedule to which the District has taken any uncorrected exception, shall serve as a basis for returning an application for payment in its entirety.

9.2.4 Unless the Contractor has elected to post securities in lieu of retention in accordance with California Public Contract Code Section 22300 and the Agreement, and the Contractor and the District have executed an escrow agreement in accordance with the Public Contract Code and the Agreement, the District will make progress payments to the Contractor in accordance with applicable law in the amount of 95 percent of the value of the labor actually performed and the material incorporated in the Work as specified in Contractor's verified application for payment upon approval by the District's authorized representative(s). Payment of progress payments will not be construed as acceptance of the Work performed. If the Contractor has elected to post securities in lieu of retention in accordance with Public Contract Code Section 22300 and the Agreement and the Contractor and the District have executed an escrow agreement in accordance with the Public Contract Code and the Agreement, the District will make payments to the Contractor or the Contractor's escrow agent in accordance with such escrow agreement.

9.2.5 The District will pay the Contractor's final invoice in accordance with applicable law and this Section 9 following acceptance of the Work provided that:

9.2.5.1 The Contractor has furnished evidence satisfactory to the District that all claims for labor and material have been paid, or the time for filing valid stop notices has passed and no stop notices have been filed, or all stop notices filed have been released by valid release or release bond acceptable to the District.

9.2.5.2 No claim has been presented to the District by any person based upon any acts or omissions of the Contractor or any subcontractor engaged in the performance of the Work.

9.2.5.3 No other claim or dispute exists under the Agreement or applicable law concerning payment of the Contractor's final invoice and/or release of the Agreement retention.

9.2.5.4 The Contractor has filed with the District the Maintenance Bond provided in the Contract Documents with duly notarized signatures of an authorized representative of the Contractor and an attorney-in-fact of an admitted surety insurer acceptable to the District and such Maintenance Bond binds the Contractor as Principal and the Surety in accordance with its terms in the amount of 10% of the final Contract Price.

9.2.5.5 The Contractor's application for final payment contains a written waiver of all claims against the District of which the Contractor may not yet asserted at the time of the submission of the application for final payment.

9.2.5.6 In accordance with California Public Contract Code Section 7107, the final payment or release of retention shall not be due and payable until the expiration of 60 days from the date of recording the Notice of Completion by the District.

9.2.6 In accordance with California Public Contract Code Section 20104.50, if the District fails to make a progress payment within 30 calendar days of receipt of an undisputed, properly submitted application for payment, the District will pay the Contractor interest equivalent to the legal rate set forth in subdivision (a) of California Code of Civil Procedure Section 685.010. The number of calendar days available to the District to make a payment without incurring an interest obligation pursuant to this provision and California Public Contract Code Section 20104.50 will be reduced by the number of calendar days, if any, by which the District has delayed return of an application for payment beyond the seven day return requirement set forth in Section 9.2.5.

9.3 Non-Allowable Direct Charges. The following costs are not allowable direct charges under the Agreement. The following costs may only be paid under the Agreement, if at all, as part of any allowance for contractor overhead and/or profit established under the Agreement.

9.3.1 Labor costs in excess of applicable prevailing wages pursuant to the Agreement and applicable law, liability and workers compensation insurance, social security, retirement and unemployment insurance and other employee compensation and benefits pursuant to bona fide compensation plans in effect at the time specified for the opening of Project bids for contractor and subcontractor employees engaged in the performance of the Work. However, in no event will allowable direct labor charges under the agreement include employee bonuses, employee vehicles or vehicle allowances, employee telephones or telephone allowances, or employee housing or housing allowances, whether or not such benefits are part of a bona fide compensation plan in effect at the time specified for the opening of Project bids.

9.3.2 Superintendent labor and clerical labor.

9.3.3 Bond premiums

9.3.4 Insurance in excess of that required under Section 8.8

9.3.5 Utility costs

9.3.6 Work Site office expenses

9.3.7 Home office expenses.

9.4 Withhold. The District or its agent may, in accordance with the Contract Documents and applicable law, withhold any payment of monies due or that may become due the Contractor because of:

9.4.1 Defective work not remedied or uncompleted work.

9.4.2 Claims filed or reasonable evidence indicating probable filing of claims.

9.4.3 Failure to properly pay subcontractors or to pay for material or labor.

9.4.4 Reasonable doubt that the Work can be completed for the balance then unpaid.

9.4.5 Damage to another contractor.

9.4.6 Damage to the District.

9.4.7 Damage to a third party.

9.4.8 Delay in the progress of the Work, which, in the District's judgment, is due to the failure of the Contractor to properly expedite the Work.

9.4.9 Liquidated damages or other charges that apply to the Contractor under the Agreement.

9.4.10 Any other lawful basis for withholding payment under the contract.

9.4.11 Failure of the Contractor to maintain record documents and as-built drawings.

9.4.12 Cost of insurance arranged by the District due to cancellation or reduction of the Contractor's insurance.

9.4.13 Failure to submit, revise, resubmit or otherwise conform to the requirements herein for preparing and maintaining a construction schedule.

9.4.14 Failure to make proper submissions, as specified herein.

9.4.15 Stop Notice claims filed by Contractor's subcontractors, of any tier, or its material suppliers.

9.4.16 Provisions of law that enable or require the District to withhold such payments in whole or in part.

9.4.17 Failure to comply with environmental or other regulatory requirements.

9.4.18 Failure of Contractor to submit Operation and Maintenance Manuals.

9.5 Securities in Lieu of Retention.

9.5.1 In accordance with Public Contract Code Section 22300, except where federal regulations or polices do not permit substitution of securities, the Contractor may substitute securities for any moneys withheld by the District to ensure performance of the Work. At the Contractor's request and expense, securities equivalent to the amount withheld will be deposited with the District, or with a state or federally chartered bank in California as the escrow agent, who will then pay those moneys to the Contractor under the terms of an Escrow for Security Deposit agreement. The Escrow for Security Deposit agreement is provided in the Contract Documents. Upon satisfactory completion of the Work, the securities will be returned to the Contractor.

9.5.2 Alternatively, at the Contractor's request and expense, the District will pay retentions earned directly to the escrow agent. At the Contractor's expense, the Contractor may direct investment of the payments into securities. Upon satisfactory completion of the Work, the Contractor will receive from the escrow agent all securities, interest, and payments received by the escrow agent from the District pursuant to this provision and the terms of the Escrow for Security Deposit agreement. The Contractor will, within twenty (20) working days of receipt of payment, pay to each subcontractor the respective amount of interest earned, less costs of retention withheld from each Subcontractor, on monies withheld to ensure the Contractor's performance of the Work.

9.5.3 Securities eligible for investment in accordance with this provision include those listed in Government Code Section 16430, bank or savings and loan certificates of deposit, interest bearing demand deposit accounts, standby letters of credit, or any other security mutually agreed to by the Contractor and the District.

9.5.4 The Contractor will be the beneficial owner of any securities substituted for moneys withheld and will receive any interest thereon.

10. PROJECT ACCEPTANCE AND CLOSEOUT

10.1 Occupancy. The District reserves the right to occupy or use any part or parts or the entire of the Work before the Work is fully performed. Subject to applicable law, exercising this right will in no way constitute acceptance of any part of the Work so occupied or used or acceptance of the entire Work, nor will such occupancy or use in any way affect the times when payments will become due the Contractor, nor will such occupancy or use in any way prejudice the District's rights under the Agreement, any Agreement bonds, or at law or equity. Occupancy or use shall not waive the District's rights to assess liquidated damages in accordance with Section 7 after the date of such occupancy or use.

10.2 Work Completion and Final Inspection.

10.2.1 Certificate of Completion. When the Contractor considers the Work is completed, the Contractor will submit written certification to the District Engineer specifying that: the Contract Documents have been reviewed; the Work has been inspected for compliance with the Contract Documents; the Work has been completed in accordance with the Contract Documents; and that equipment and systems have been tested in the presence of the District's

representative and are operational. The District and/or the District's authorized representatives will make an inspection to verify that the Work is complete and will notify the Contractor in writing of any incomplete or deficient Work. The Contractor will take immediate steps to remedy the stated deficiencies and give notice of correction to the District Engineer. Upon receiving a notice of correction, the District or the District's authorized representatives will re-inspect the Work. The Contractor must correct all punch list items within 15 working days after the issuance of the punch list.

10.2.2 Project Record Drawings (As-Builts). Before acceptance of the Work the Contractor must submit:

1. One set of Project Record Drawings, based on the Conformed Set, in 24 x 36 and 11 x 17 sheets.
2. Project Record Drawings, based on the Conformed Set, in AutoCad (.DWG) and portable document file (.PDF) formats.
3. Equipment operating and maintenance instructions and data: one set of hard copy, and one scanned set in portable document file (.PDF) format.
4. Miscellaneous construction-related documents, studies, reports, etc., obtained or developed by the contractor during construction of the project in portable document file (.PDF) format.
5. Maintenance Bond, warranties, etc.

10.3 Work Acceptance.

10.3.1 All finished Work will be subject to inspection and acceptance or rejection by the District, the District Engineer, and the Architect or Engineer and other government agencies having jurisdiction over the Work. Final acceptance of the Work will be at the discretion of the District.

10.3.2 The District will accept the Work in writing only when the Work has been completed to the District's reasonable satisfaction. Progress payments will in no way be construed as acceptance of any part of the Work.

10.3.3 In evaluating the Work, no allowance will be made for deviations from the Technical Specifications, Drawings or other Contract Documents unless already approved in writing in accordance with the requirements of Section 4, above.

10.3.4 The fact that the Work and materials have been inspected from time to time and that progress payments have been made does not relieve the Contractor of the responsibility of replacing and making good any defective or omitted work or materials in accordance with the requirements of the Contract Documents.

11. REMEDIES AND DISPUTES

11.1 Failure to Correct Work. Within ten (10) working days of receiving written notice from the District describing Work that is defective or that is otherwise not in accordance with the requirements of the Agreement and/or applicable law and directing that such Work be corrected, the Contractor and/or the Contractor's sureties must give the District written notice of the intent of the Contractor and/or the Contractor's sureties to correct such Work and commence correction of such Work in accordance with the District's notice and the Agreement. If the Contractor and/or the Contractor's sureties do not give the District written notice of intent to correct such Work and commence correction of such Work within ten (10) working days of receipt of the District's notice, then the District may correct such work and/or have such work corrected for the account and at

the expense of the Contractor and/or its sureties, and the Contractor and/or its sureties will be liable to the District for any resulting excess cost. The District may, in addition to all other remedies that the District may have under the Agreement and at law or equity, deduct any such excess cost of completing the Work from amounts that are due or that may become due the contractor.

11.2 Termination.

11.2.1 In accordance with California Public Contract Code Section 7105, in addition to all other available remedies that the District may have under the Agreement, and at law or equity, the District may terminate the Contractor's control of the Work:

11.2.1.1 If the Contractor or any of its subcontractors engaged in the performance of the Work fails to timely perform the Work and/or any of the Contractor's material obligations under the Contract Documents, including but not limited to submission of an acceptable schedule, that have accrued except for due to reasons beyond the control of the Contractor pursuant to the Contract Documents.

11.2.1.2 If the Contractor is adjudged bankrupt, or if it should make a general assignment for the benefit of creditors, or if a receiver should be appointed on account of its creditors.

11.2.1.3 If the Contractor or any of the subcontractors engaged in the performance of the Work persistently or repeatedly refuses or fails to supply enough properly skilled workmen or proper materials for the timely completion of the Work.

11.2.1.4 If the Contractor fails to make prompt payment to subcontractors engaged in the performance of the Work or for material or labor used in the performance of the Work in accordance with the Contract Documents and applicable law.

11.2.1.5 If the Contractor or any subcontractors engaged in the performance of the Work persistently disregards laws or ordinances applicable to the performance of the Work, or the instructions of the District, the District Engineer, the Architect, or other authorized representatives of the District.

11.2.1.6 For any reason or for no reason, at the District's sole discretion.

11.2.2 If the District intends to terminate the Contractor's control of the Work for any of the reasons specified in Sections 11.2.1.1 through 11.2.1.5, above, the District will immediately serve written notice to the Contractor and its sureties in accordance with the Contract Documents. Notice of the District's intent to terminate the Contractor's control of the Work will be given by registered or certified mail and specify the grounds for termination, the required cure and the time by which the cure must be effected. Upon receipt of notice of the District's intent to terminate the Contractor's control of the Work for any of the reasons specified in provisions 11.2.1.1 through 11.2.1.5, above, the Contractor will have ten (10) working days from receipt of the notice or a longer time specified

in the notice to cure its default. If the Contractor does not effect the required cure by the time specified in the notice, the District will issue a written notice of termination to the Contractor and its sureties by registered or certified mail. The notice of termination will specify: that upon receipt of the notice the Contractor's right to perform or complete the Work, including on behalf of the Contractor's sureties, is terminated; that the Contractor's sureties will have the right to take over and complete the Work and perform all of the Contractor's remaining obligations that have accrued under the Agreement; and that if the Contractor's sureties do not both give the District written notice of their intention to take over and perform the Agreement and commence completion of the Work and performance of all of the Contractor's remaining obligations that have accrued under the Agreement within ten (10) working days after receipt of notice of termination that the District may declare the Contractor's sureties in default and take over the completion of the Work or have the Work completed for the account and at the expense of the Contractor and its sureties, and the Contractor and its sureties will be liable to the District for any resulting excess cost. The District may, in addition to all other available remedies that the District may have under the Contract Documents and at law or equity, deduct any such excess cost of completing the Work from amounts that are due or that may become due the Contactor.

11.2.3 Upon termination of the Contractor's control of the Work for any of the reasons specified in Sections 11.2.1.1 - 11.2.1.5, the Contractor will, if so directed by the District, immediately remove from the Work site any and all materials and personal property belonging to the Contractor which have not been incorporated in the Work and the Contractor and its sureties will be liable upon their bond for all damages caused the District by reason of the Contractor's failure to complete the Work.

11.2.4 Upon termination of the Contractor's control of the Work for any of the reasons specified in provisions 11.2.1.1 through 11.2.1.5, above, the District reserves the right to refuse tender of the Contractor by any surety to complete the Work.

11.2.5 If the District completes or has completed any portion of, or the whole of the Work, following termination of the Contractor's control of the Work for any of the reasons specified in Sections 11.2.1.1 through 11.2.1.5, above, the District will neither be liable for nor account to the Contractor or the Contractor's sureties in any way for the time within which, or the manner in which such Work is performed, or for any changes made in such Work or for the money expended in satisfying claims and/or suits and/or other obligations in connection with completing the Work. If, following termination of the Contractor's control of the Work for any of the reasons specified in Sections 11.2.1.1 through 11.2.1.5, above, the unpaid balance of the Contract Price exceeds the expense of completing the Work, including compensation for additional legal, managerial and administrative services and all other amounts due for the completion of the Work and/or satisfaction of claims of the District and/or others arising out of the Agreement and any other charges that apply to the Contractor under the Agreement, the difference will be paid to the Contractor. If such expenses of completing the Work exceed the unpaid balance of the Contract Price, the Contractor or its sureties will pay the difference to the District.

11.2.6 If the Agreement or Contractor's control of the Work is terminated for any reason, no allowances or compensation will be granted for the loss of any anticipated profit by the Contractor.

11.2.7 In accordance with California Government Code Section 4410, in the event a national emergency occurs, and public work being performed by contract is stopped, directly or indirectly, because of the freezing or diversion of materials, equipment or labor, as the result of an order or a proclamation of the President of the United States, or of an order of any federal authority, and the circumstances or conditions are such that it is impracticable within a reasonable time to proceed with a substantial portion of the work, then the District and the Contractor may, by written agreement, terminate the Agreement. In accordance with California Government Code Section 4411, such an agreement will include the terms and conditions of the termination of the contract and provision for the payment of compensation or money, if any, which either party will pay to the other or any other person, under the facts and circumstances in the case. Compensation to the Contractor will be determined on the basis of the reasonable value of the work done, including preparatory work. As an exception to the foregoing, in the case of any fully completed separate item or portion of the Work for which there is a separate contract price, the contract price shall control. The parties may in any other case adopt the contract price as the reasonable value of the work or any portion of the work done.

11.3 Disputes.

11.3.1 In accordance with California Public Contract Code Section 20104.2, the following procedures apply to claims of $375,000 or less between the Contractor and the District:

11.3.1.1 The claim shall be in writing and include the documents necessary to substantiate the claim. Claims must be filed on or before the date of final payment. Nothing in this subdivision is intended to extend the time limit or supersede notice requirements otherwise provided by contract for the filing of claims.

11.3.1.2 For claims of less than fifty thousand dollars ($50,000), the District shall respond in writing to any written claim within forty five (45) calendar days of receipt of the claim, or may request, in writing, within thirty (30) days of receipt of the claim, any additional documentation supporting the claim or relating to defenses to the claim the District may have against the Contractor.

11.3.1.2.1 If additional information is thereafter required, it shall be requested and provided pursuant to this subdivision, upon mutual agreement of the District and the Contractor.

11.3.1.2.2 The District's written response to the claim, as further documented, shall be submitted to the Contractor within fifteen (15) calendar days after receipt of the further documentation or within a period of time no greater than that taken by the Contractor in producing the additional information, whichever is greater.

11.3.1.3 For claims of over fifty thousand dollars ($50,000) and less than or equal to three hundred seventy-five thousand dollars ($375,000), the District shall respond in writing to all written claims within sixty (60) calendar days of receipt of the claim, or may request, in writing, within thirty (30) calendar days of receipt of the claim, any additional documentation supporting the claim or relating to defenses to the claim the District may have against the Contractor.

11.3.1.3.1 If additional information is thereafter required, it shall be requested and provided pursuant to this subdivision, upon mutual agreement of the District and the Contractor.

11.3.1.3.2 The District's written response to the claim, as further documented, shall be submitted to the Contractor within thirty (30) calendar days after receipt of the further documentation, or within a period of time no greater than that taken by the Contractor in producing the additional information or requested documentation, whichever is greater.

11.3.1.4 If the Contractor disputes the District's written response, or the District fails to respond within the time prescribed, the Contractor may so notify the District, in writing, either within fifteen (15) calendar days of receipt of the District's response or within fifteen (15) calendar days of the District's failure to respond within the time prescribed, respectively, and demand an informal conference to meet and confer for settlement of the issues in dispute. Upon a demand, the District shall schedule a meet and confer conference within thirty (30) calendar days for settlement of the dispute.

11.3.1.5 Following the meet and confer conference, if the claim or any portion remains in dispute, the Contractor may file a claim as provided in Chapter 1 (commencing with Section 900) and Chapter 2 (commencing with Section 910) of Part 3 of Division 3.6 of Title 1 of the Government Code. For purposes of those provisions, the running of the period of time within which a claim must be filed shall be tolled from the time the Contractor submits his or her written claim pursuant to subdivision (a) until the time that claim is denied as a result of the meet and confer process, including any period of time utilized by the meet and confer process.

11.3.1.6 This article does not apply to tort claims and nothing in this article is intended nor shall be construed to change the time periods for filing tort claims or actions specified by Chapter 1 (commencing with Section 900) and Chapter 2 (commencing with Section 910) of Part 3 of Division 3.6 of Title 1 of the Government Code.

11.3.2 In accordance with California Public Contract Code Section 20104.4, the following procedures apply to civil actions to resolve claims greater than $375,000 between the District and the Contractor:

11.3.2.1 Within sixty (60) calendar days, but no earlier than thirty (30) calendar days, following the filing or responsive pleadings, the court shall submit the matter to non-binding mediation unless waived by mutual stipulation of both parties. The mediation process shall provide for the selection within fifteen (15) calendar days by both parties of a disinterested third person as mediator, shall be commenced within thirty (30) calendar days of the submittal, and shall be concluded within fifteen (15) calendar days from the commencement of the mediation unless a time requirement is extended upon a good cause showing to the court or by stipulation of both parties. If the parties fail to select a mediator within the 15-day period, any party may petition the court to appoint the mediator.

11.3.2.2 If the matter remains in dispute, the case shall be submitted to judicial arbitration pursuant to Chapter 2.5 (commencing with Section 1141.10) of Title 3 of Part 3 of the Code of Civil Procedure, notwithstanding Section 1141.11 of that code. The Civil Discovery Act of 1986 (Article 3 (commencing with Section 2016) of Chapter 3 of Title 3 of Part 4 of the Code of Civil Procedure) shall apply to any proceeding brought under this subdivision consistent with the rules pertaining to judicial arbitration.

11.3.2.2.1 Notwithstanding any other provision of law, upon stipulation of the parties, arbitrators appointed for purposes of this article shall be experienced in construction law, and, upon stipulation of the parties, mediators and arbitrators shall be paid necessary and reasonable hourly rates of pay not to exceed their customary rate, and such fees and expenses shall be paid equally by the parties, except in the case of arbitration where the arbitrator, for good cause, determines a different division. In no event shall these fees or expenses be paid by state or county funds.

11.3.2.2.2 In addition to Chapter 2.5 (commencing with Section 1141.10) of Title 3 of Part 3 of the Code of Civil Procedure, any party who after receiving an arbitration award requests a trial de novo but does not obtain a more favorable judgment shall, in addition to payment of costs and fees under that chapter, pay the attorney's fees of the other party arising out of the trial de novo.

11.3.2.3 The court may, upon request by any party, order any witnesses to participate in the mediation or arbitration process.

11.3.3 In accordance with California Public Contract Code Section 20104.6:

11.3.4.1 The District shall not fail to pay money as to any portion of a claim which is undisputed except as otherwise provided in the contract.

11.3.4.2 In any suit filed under Public Contract Code Section 20104.4 concerning this contract, the District shall pay interest at the legal rate

on any arbitration award or judgment. Such interest shall accrue from date the suit was filed.

THIS PAGE INTENTIONALLY LEFT BLANK

LAS GALLINAS VALLEY SANITARY DISTRICT
101 Lucas Valley Road, Suite 300
San Rafael, California 94903

PERFORMANCE BOND

BOND NO. _____

PREMIUM: _____

KNOW ALL MEN BY THESE PRESENTS:

WHEREAS, LAS GALLINAS VALLEY SANITARY DISTRICT, (hereinafter designated as "Obligee") and _____ (hereinafter designated as "Principal") have entered into an agreement whereby principal agrees to install and complete certain designated public improvements, which said agreement, dated _____, and identified as project BIOSOLIDS LAND APPLICATION SERVICES 2024, JOB NO. 24580-01, is hereby referred to and made a part hereof; and

WHEREAS, Said principal is required under the terms of said agreement to furnish a bond for the faithful performance of said agreement;

NOW, THEREFORE, We, the principal and _____ as surety, are held and firmly bound unto the hereinafter called "The Obligee," in the penal sum of _____ dollars ($ _____) lawful money of the United States for the payment of which sum well and truly to be made, we bind ourselves, our heirs, successors, executors and administrators, jointly and severally firmly by these presents.

The condition of this obligation is such that if the above bound principal, his or its heirs, executors, administrators, successors or assigns, shall in all things stand to and abide by, and well and truly keep and perform the covenants, conditions and provisions in the said agreement and any alteration thereof made as therein provided, on his or their part, to be kept and perform and at the time and in the manner therein specified, and in all respects according to their true intent and meaning, and shall indemnify and save harmless the Obligee, its officers, agents and employees, as therein stipulated, then this obligation shall become null and void; otherwise it shall be and remain in full force and effect.

As part of the obligation secured hereby and in addition to the face amount specified therefore, there shall be included costs and reasonable expenses and fees, including reasonable attorney's fees, incurred by county in successfully enforcing such obligation, all to be taxed as costs and included in any judgment rendered.

The surety hereby stipulates and agrees that no change, extension of time, alteration or addition to the terms of the agreement or to the work to be performed thereunder or the specification accompanying the same shall in any wise affect its obligations on this bond, and it does hereby waive notice of any such change, extension of time, alteration or addition to the terms of the agreement or to the work or to the specifications.

IN WITNESS WHEREOF, the above-bound parties have executed this instrument under their several seals this_____day of _____,_____, the name and corporate seals of each corporate party being hereto affixed and these presents duly signed by their undersigned representatives, pursuant to authority of their governing bodies.

(Corporate Seal)

PRINCIPAL

By:

(Acknowledgement) Title:_____

(Corporate Seal)

SURETY

By:_____

(Attorney-in-fact)

(Acknowledgement) Title:_____

(NOTE TO SURETY COMPANY: A certified copy of unrevoked resolution of authority for the attorney-in-fact must be submitted with and attached to the executed bid bond.)

LAS GALLINAS VALLEY SANITARY DISTRICT
101 Lucas Valley Road, Suite 300
San Rafael, California 94903

PAYMENT/LABOR AND MATERIALS BOND

BOND NO.: _____

KNOW ALL MEN BY THESE PRESENTS:

That we, _____ Principal, and _____, incorporated under the laws of the State of _____ and authorized to execute bonds and undertakings as sole surety, as Surety, are held and firmly bound unto any and all persons named in California Civil Code Section 1181 whose claim has not been paid by the contractor, company or corporation, in the aggregate total of _____ dollars ($ _____) , for the payment whereof, well and truly to be made, said Principal and Surety bind themselves, their heirs, administrators, successors and assigns, jointly and severally, firmly by these present.

The Condition of the foregoing obligation is such that; whereas the above bounden Principal has entered into a contract, dated _____, with the LAS GALLINAS VALLEY SANITARY DISTRICT to do the following work, to-wit: BIOSOLIDS LAND APPLICATION SERVICES 2024, JOB NO. 24580-01.

NOW, THEREFORE, if the above bounden Principal contractor, person, company or corporation, or his or its subcontractor, fails to pay any claimant named in Section 3181 of the Civil Code of the State of California, or amounts due under the Unemployment Insurance Code, with respect to work or labor performed by any such claimant, that, the Surety on this bond will pay the same, in an amount not exceeding the aggregate sum specified in this bond, and also in case suit is brought upon this bond, a reasonable attorney's fee, which shall be awarded by the court to the prevailing party in said suit, said attorney's fee to be taxes as costs in said suit. This bond shall inure to the benefit of any person named in Section 3181 of the Civil Code of the State of California so as to vie a right of action to them or their assignees in any suit brought upon this bond.

This bond is executed and filed to comply with the provisions of the act of Legislature of the State of California as designated in Civil Code Sections 3247-3252 inclusive, and all amendments thereto.

IN WITNESS WHEREOF, the above-bound parties have executed this instrument under their several seals this _____ day of _____, _____ the name and corporate seals of each corporate party being hereto affixed and these presents duly signed by their undersigned representatives, pursuant to authority of their governing bodies.

(Corporate Seal)

PRINCIPAL

By:
(Acknowledgement) Title:_____

(Corporate Seal)

SURETY

By:_____

(Attorney-in-fact)

(Acknowledgement) Title:_____

(NOTE TO SURETY COMPANY: A certified copy of unrevoked resolution of authority for the attorney-in-fact must be submitted with and attached to the executed bid bond.)

LAS GALLINAS VALLEY SANITARY DISTRICT
101 Lucas Valley Road, Suite 300
San Rafael, California 94903

ESCROW AGREEMENT FOR

SECURITY DEPOSITS IN LIEU OF RETENTION

This Escrow Agreement is made and entered into by and between the Board of the LAS GALLINAS VALLEY SANITARY DISTRICT, whose address is 101 Lucas Valley Road Suite 300, San Rafael, California, 94903, hereinafter called "District", _____ _____, whose address is _____, hereinafter called "Contractor", and _____, whose address is _____, hereinafter called “Escrow Agent”
For consideration hereinafter set forth, the District, Contractor, and Escrow Agent agree as follows:

1. Pursuant to Section 22300 of the Public Contract Code of the State of California, Contractor has the option to deposit securities with Escrow Agent as a substitute for retention earnings required to be withheld by District pursuant to the Construction Contract entered into between the District and Contractor for the project entitled BIOSOLIDS LAND APPLICATION SERVICES 2024 in the amount of _____ dated _____ (hereinafter referred to as the "Contract'). Alternatively, on written request of the Contractor, the District shall make payments of the retention earnings directly to the Escrow Agent. When Contractor deposits the securities as substitute for Contract earnings, the Escrow Agent shall notify the District within ten (10) working days of the deposit. The market value of the securities at the time of the substitution shall be at least equal to the cash amount then required to be withheld as retention under the terms of the Contract between the District and Contractor. Securities shall be held in the name of _____ and shall designate the Contractor as the beneficial owner.

2. The District shall make progress payments to the Contractor for such funds which otherwise would be withheld from progress payments pursuant to the Contract provisions, provided that the Escrow Agent holds securities in the form and amount specified above.

3. When the District makes payment of retentions earned directly to the Escrow Agent, the Escrow Agent shall hold them for the benefit of the Contractor until such time as the escrow created under this contract is terminated. The Contractor may direct the investments of the payments into securities. All terms and conditions of this agreement and the rights and responsibilities of the parties shall be equally applicable and binding when the District pays the escrow agent directly.

4. Contractor shall be responsible for paying all fees for the expenses incurred by Escrow Agent in administering the Escrow Account and all expenses of the District. These expenses and payment terms shall be determined by the District, Contractor and Escrow Agent.

5. The interest earned on the securities or the money market accounts held in escrow and all interest earned on that interest shall be for the sole account of the Contractor and shall be

subject to withdrawal by contractor at any time and from tune to time without notice to the District.

6. Contractor shall have the right to withdraw all or any part of the principal in the Escrow Account only by written notice to Escrow Agent accompanied by written authorization from District to the Escrow Agent that District consents to the withdrawal of the amount sought to be withdrawn by Contractor.

7. The District shall have a right to draw upon the securities in the event of default by the Contractor. Upon seven day's written notice to the Escrow Agent from the District of the default, the Escrow Agent shall immediately convert the securities to cash and shall distribute the cash as instructed by the District.

8. Upon receipt of written notification from the District certifying that the Contract is final and complete, and that the Contractor has complied with all requirements and procedures applicable to the Contract, Escrow Agent shall release to Contractor all securities and interest on deposit less escrow fees and charges of the Escrow Account. The escrow shall be closed immediately upon disbursement of all monies and securities on deposit and payments of fees and charges.

9. Escrow Agent shall rely on the written notifications from the District and the Contractor pursuant to Sections (4) to (6) inclusive, of this agreement and the District and Contractor shall hold Escrow Agent harmless from Escrow Agent's release and disbursement of the securities and interest as set forth above.

10. The names of the persons who are authorized to give written notice or to receive written notice on behalf of the District and on behalf of Contractor in connection with the foregoing, and exemplars of their respective signatures, are as follows:

On behalf of District:	On Behalf of Contractor
	_____
	Title
_____	_____
Curtis Paxton, General Manager	Name

On behalf of Escrow Agent:

_____
Title

_____
Name

_____
Signature

_____
Address

At the time the Escrow Account is opened, the District and Contractor shall deliver to the Escrow Agent a fully executed counterpart of this Agreement.

IN WITNESS WHEREOF, the parties have executed this Agreement by their proper officers on the date first set forth above.

District:

_____
Curtis Paxton, General Manager
Las Gallinas Valley Sanitary District
101 Lucas Valley Road, Suite 300
San Rafael, CA 94903

Contractor:

_____
Title

_____
Name

_____
Signature

_____
Address

THIS PAGE INTENTIONALLY LEFT BLANK

VOLUME 2
BID FORMS

THIS PAGE INTENTIONALLY LEFT BLANK

_____
Name of Bidder

LAS GALLINAS VALLEY SANITARY DISTRICT
101 Lucas Valley Road, Suite 300
San Rafael, California 94903

BIDDER'S CHECK LIST

Name of Bidder: _____
(Contractor's Legal Name)

Did You:

_____ Send a properly completed Acknowledgement form immediately after receiving the Contract Documents and before bid opening.

_____ Submit equal product proposals, if any, in accordance with the Instruction to Bidders included in the bid package at least seven (7) calendar days before the time specified for bid opening.

_____ Include with your bid properly completed, accurate copies of the following documents in the following order using the forms included in the bid package:

- _____ Bidder's Check List and Bid Label
- _____ Proposal Cover Page and Bid Schedule
- _____ Acknowledgement of each addendum issued by the District, if any, with signed and dated acknowledgement page.
- _____ Executed Bid Bond
- _____ Contractor License Information
- _____ List of Proposed Subcontractors with License Information and References
- _____ List of Major Materials
- _____ Workers Compensation Insurance Certification
- _____ Signed and notarized Non-Collusion Affidavit
- _____ Drug-Free Workplace Certification
- _____ Debarment Certification
- _____ Statement of Experience of Bidder
- _____ Financial Qualifications
- _____ Signed and Notarized Site Visit Affidavit
- _____ Executed Bidder's Signature Page

(CONTINUED ON NEXT PAGE)

_____
Name of Bidder

_____ Affix a properly completed, signed and accurate Bid Label using the form included in the bid package to the sealed cover of your bid.

_____ Arrange to have the sealed bid delivered to the **Engineering Department, Las Gallinas Valley Sanitary District, 101 Lucas Valley Road, Suite 300, San Rafael, CA 94903** before the time and day specified on the Notice Inviting Sealed Bids.

_____
Name of Bidder

LAS GALLINAS VALLEY SANITARY DISTRICT
101 Lucas Valley Road, Suite 300
San Rafael, California 94903

BID LABEL

Sealed bid for the BIOSOLIDS LAND APPLICATION SERVICES 2024, JOB NO. 24580-01.

Bidder: _____

Bidder Business Address (Street, City, State and Zip Code)

_____

_____

Bidder Business Phone No.: _____

Bidder Business Fax No.: _____

Bidder Email Address: _____

By my signature below I certify under penalty of perjury under the laws of the State of California that a representative of the above bidder visited the project sites listed in the Contract Documents, and I am the person authorized to bind bidder as required by the attached Site Visit Affidavit.

By: _____
(Official authorized to bind bidder)

Print Name and Title: _____

THIS PAGE INTENTIONALLY LEFT BLANK

_____
Name of Bidder

LAS GALLINAS VALLEY SANITARY DISTRICT
101 Lucas Valley Road, Suite 300
San Rafael, California 94903

PROPOSAL COVER PAGE AND BID SCHEDULE

TO THE BOARD OF DIRECTORS OF THE LAS GALLINAS VALLEY SANITARY DISTRICT:

Pursuant to the Notice Inviting Sealed Bids for the BIOSOLIDS LAND APPLICATION SERVICES 2024 PROJECT, JOB NO. 24580-01, the person signing the bidder's signature page contained in this proposal binds the entity listed on the bidder's signature page to submit complete, executed copies of all documents specified in the contract checklist included in Volume 1 of the bid package within seven (7) calendar days of receiving written Notice of Award of the project, and to fully perform the project by the time for completion specified in the Contract Documents for the price specified in the bid schedule below in accordance with the terms of the Contract Documents and applicable law. This proposal cover page and bid schedule will be included as part of the Contract Documents in accordance with the bid package.

This bid includes properly completed, accurate copies of all of the documents listed in the Bidder's Check List included in the bid package in the order listed in the Bidder's Check List and using the forms included in the bid package.

ADDENDUM ACKNOWLEDGEMENT

This bid includes copies of each of the following addenda issued by the District. Each addendum has been signed and dated to confirm receipt on behalf of the entity listed on the bidder's signature page.

Addendum No. 1 dated _____

Addendum No. 2 dated _____

Addendum No. 3 dated _____

Addendum No. 4 dated _____

Addendum No. 5 dated _____

BID SCHEDULE

For **BIOSOLIDS LAND APPLICATION SERVICES 2024** complete in place and specified, including but not limited to:

DESCRIPTION OF BID ITEMS

The undersigned, as Proposer, agrees to provide all the necessary machinery, tools, apparatus and other means of service; to furnish all materials; to provide superintendence, overhead expenses and all labor and expenses of whatever nature necessary, to perform the BIOSOLIDS LAND APPLICATION SERVICES 2024 project, which includes creating a Work Plan and removing the accumulated biosolids from the Sludge Storage Ponds, as well as providing the service of seeding the Land Application Parcel (i.e., APN-155-011-33), in conformance with the Scope of Services, and other provisions herein or reasonably implied thereby or as necessary to complete the Work in the manner and within the time named herein and according to the requirements and to the reasonable satisfaction of the District; to pay all charges of freight, transportation, conveyance, and hauling; and that the Proposer shall complete the work in accordance with the Contract Documents for the following unit prices.

Note:

- The materials are Class B Biosolids that are routinely tested per the District's permit requirements. Additional information regarding the materials can be found in the annual biosolids reports available for review upon request.
- The LGVSD Reclamation Area is an active wildlife area with many community members on footpaths and around the Land Application Parcel area and other Work areas. Contractor vehicles shall be limited to a maximum speed of 10 mph or less as needed to prevent creation of dust clouds, while performing Work on District property. Contractor at its sole discretion may obtain permission from the adjacent property owner for alternative access to the Work area.

<u>Bid Item No. 1: Mobilization and Demobilization, Bonds, and Insurance</u> – This unit price proposal item shall include the mobilization, demobilization, and all bonds and insurance required in the Contract. Mobilization shall consist of preparatory work and operations necessary for the movement of personnel, equipment, supplies, and incidentals to the Project site; for the establishment of facilities necessary for work on the Project; and for other work and operations which must be performed, or costs incurred prior to beginning work on the dredging and removal of liquid biosolids from the Sludge Storage Ponds. Demobilization shall consist of all labor, material, and equipment necessary to complete demobilization and final repair and clean-up of the liquid biosolids handling areas (e.g., Land Application Parcel; roadways) and Sludge Storage Pond area and other costs incidental thereto.

Measurement and payment for mobilization/demobilization shall include full compensation for furnishing all labor, materials, tools, equipment, and incidentals, and for doing all the work involved in mobilization as specified herein. Mobilization/demobilization shall also include removing all Contractor-mobilized equipment, cleaning, and restoring the site, District-owned equipment, and plant facilities, and doing all the work involved in demobilization as specified herein.

<u>Bid Item No. 2A: Biosolids Land Application</u> – This unit price proposal item shall be the cost per

dry ton of wastewater biosolids removed from the Sludge Storage Ponds for land application by subsurface injection (i.e., beneficial use) in APN 155-011-33 designated as Land Application Parcel, and shall include all labor, materials, equipment and environmental permitting and monitoring necessary to legally extract, analyze, load, transport, convey, monitor, and beneficially land apply, by subsurface injection, accumulated liquid biosolids from a single Sludge Storage Pond or several Sludge Storage Ponds (see Volume 4 for Site Plan & Land Application Site); each Sludge Storage Pond has a storage capacity of approximately one million gallons. Contractor shall commence work beginning with Sludge Storage Pond B, or as directed by District. The intent of the District is that the Work empty the Sludge Storage Pond or ponds, or as directed by District. Contractor shall mix the Sludge Storage Pond(s) for correct application by subsurface injection at the Land Application Parcel.

The quantity of biosolids removed from the Sludge Storage Ponds is calculated based on the total dry tons of biosolids removed for each day. The total quantity that the District anticipates will need to be removed is up to an estimated 264 dry tons contained in a volume of up to one to two million gallons of stored material (assumes up to one to one-and-a-half million gallons of material on the Land Application Parcel and up to five hundred thousand gallons of material on the DLD). The actual quantity of liquid biosolids that can be applied by subsurface injection in the Land Application Parcel may vary, and remaining liquid biosolids shall be disposed of in the Dedicated Land Disposal (DLD) Area under a separate bid item (see Bid Item No. 4 description).

The Contractor shall convey the liquid biosolids from the Sludge Storage Ponds to the Land Application Parcel and apply liquid biosolids by subsurface injection evenly across the Land Application Parcel, excluding the buffer zones, at the proper application/agronomic rate. In conveying or transporting or managing liquid biosolids material at and between the Sludge Storage Ponds and Land Application Parcel, Contractor shall keep all roads associated with the Work open, including providing ramps over pipeline should a pipeline or equal be used to convey the liquid biosolids material. Conveyance infrastructure shall comply with Spill Prevention/Runoff Protection Plan to be included with Work Plan.

The Contractor shall develop and implement a Work Plan (to be reviewed by District), outlining Work to be performed, including seeding services (see Bid Item No. 2B), as well as a plan for runoff protection of the District Class B liquid biosolids conveyance system. Contractor to provide a Work Plan in advance of commencing the Work. The Work Plan shall be provided to the District for review and comment in advance of commencing the Work. Contractor to allow the District up to five (5) Business Days to review Work Plan and provide comments to Contractor. Work Plan shall include runoff protection plan as well as seeding services. Work Plan shall also include Contractor intent to dredge or pump mix from the Sludge Storage Pond(s); in either approach, existing cap at Sludge Storage Pond(s) shall remain during Work to mitigate odors.

Work Plan shall also include a section outlining the Contractor’s proposed methodology for determining the total solids content of the liquid biosolids material (an example methodology is included in Volume 2, Appendix I).

Payment shall be made to the Contractor for biosolids based upon the actual quantity of biosolids removed from the Sludge Storage Pond(s) and reused during the billing period on a unit cost basis of dollars per dry ton ($/DT); standard English tons (2,000 lbs.). Measurement and payment shall be based on Contractor pulling daily composite samples to determine total solids content (reported total solids to be verified by Contractor using a qualified third-party

accredited analytical laboratory) as outlined in the example protocol (Volume 2, Appendix I); District intends to run parallel tests of composite samples pulled by Contractor to verify Contractor reporting.

The Work shall be completed within a specified period shown in the Work Schedule and shall begin after the commencement date in the Notice to Proceed. The intent is to remove accumulated liquid biosolids from one or more Sludge Storage Ponds in the minimum amount of time so that the emptied pond may be put back in service with the maximum possible solids storage and treatment capacity.

The Work includes obtaining of all permits, licenses, waste acceptance profiling, and approvals required by federal, state, and local laws and regulations to handle, transport, convey, and reuse wastewater liquid biosolids by land application (i.e., subsurface injection). The Contractor shall be responsible for complying with the General Order included in the District's NOA/MRP, in addition to the NOA/MRP Sections listed in Paragraph 5, "Scope of Work" of this Notice Inviting Sealed Bids, as well as all federal, state, and local laws and regulations including monitoring, recordkeeping, and reporting requirements for biosolids land application (e.g., nitrogen compounds, 503 metals, and percent solids at time of land application as required under the General Order). All fees associated with said permits, licenses, insurance, and approvals and all cost to meet biosolids reuse requirements including Contractor's laboratory testing, monitoring, record keeping, and reporting shall be included in the unit price per dry ton of biosolids removed as paid to the Contractor for said work and no additional compensation will be made therefore.

Bid Item No. 2B: Seeding Services – Contractor to provide service of seeding up to approximately 45 acres of the Land Application Parcel after completing land application work. The Land Application Parcel was seeded in rye grass in 2023. Contractor shall seed with rye grass under this service, which is to be included in the Work Plan (see Bid Item No. 2A).

Seed services of the Land Application Parcel shall be paid on a lump sum basis. The Contractor agrees that the compensation specified herein includes all of its overhead, capital costs, permit fees, and represents all costs to perform seeding services, as well as to haul or convey and reuse the wastewater liquid biosolids including but not limited to furnishing all labor, equipment, piping, runoff controls, materials, vehicles, fees, maintenance, monitoring, and reporting as described herein and as required to provide a complete Project.

Bid Item No. 3: Coordination with USEPA Research Project Team – Unit price including, but not limited to up to eight (8) hours for: support for the collaboration and coordination with the Research Project (Unregulated Organic Chemicals in Biosolids: Prioritization, Fate and Risk Evaluation for Land Applications | Research Project Database | Grantee Research Project | ORD | US EPA) currently being conducted on District property where land application of biosolids will occur. Contractor shall provide assumed level of effort responding to up to two (2) requests for information or up to eight (8) hours for collaboration.

Collaboration may include, but is not limited to:

- Coordination of Contractor's planned work schedule and USEPA Research Project Team's sampling needs and schedule.
- USEPA Research Project Team may be onsite from time to time while Contractor is on site and "interview" the Contractor's operator for the purpose of informing USEPA Research Project needs.
- Request from USEPA Research Project Team for the Contractor to grab samples

(District to provide sampling containers) of the biosolids during extraction of the biosolids from the storage lagoons.

Bid Item No. 4: Biosolids Subsurface Injection on DLD – The dredged, or otherwise removed, Class B biosolids that cannot be applied on APN 155-011-33 (Land Application Parcel), will be subsurface injected on the District's permitted 9-acre Dedicated Land Disposal (DLD) area located adjacent to the Sludge Storage Ponds. This unit price proposal item shall be the cost per gallon of liquid biosolids drawn from the mixed pond at varied concentration removed from the Sludge Storage Ponds and injected at the District's DLD Site and shall include all labor, materials, equipment and environmental permitting and monitoring necessary to legally extract, analyze, load, transport, monitor, and disposal of biosolids. The quantity of biosolids removed from the Sludge Storage Ponds is calculated based on the total gallons of liquid biosolids removed for each day. For the purpose of the Contractor providing a unit cost (i.e., cost per gallon) for these services, Contractor can assume that between 500,000 and one million gallons may need to be disposed of through subsurface injection

Payment shall be made to the Contractor for liquid biosolids based upon the actual quantity of liquid biosolids removed and subsurface injected or disposed during the billing period on a unit cost basis of dollars per gallon ($/gal.). The Contractor agrees that the compensation specified herein includes all of its overhead, capital costs, permit fees, and represents all costs to haul or convey and reuse the wastewater solids including but not limited to furnishing all labor, equipment, materials, vehicles, fees, maintenance, insurance, testing, permitting, monitoring, and reporting as described herein and as required to provide a complete Project (i.e., perform the Work).

Payment for wastewater biosolids removal shall be on a per gallon basis of wastewater liquid biosolids removed from the Sludge Storage Ponds and properly disposed. The Contractor shall be responsible for determining the total volume of liquid wastewater biosolids conveyed to the DLD Area and shall provide sufficient record of total volume (i.e., gallons) of conveyed and subsurface injected material, implementing the example protocol included in Volume 2, Appendix I.

_____
Name of Bidder

SCHEDULE OF BID ITEMS

BASE BID ITEMS

Bid Item No.	Estimated Quantity And Unit	Item Description Bid Item or Unit Price (Written in Words)	Unit Price (Figures)	Extended Amount (Figures)
1.	1 LS	Mobilization and Demobilization, Bonds, and Insurance		
		_____ Lump Sum		$_____
2A.	264 Dry Tons	Biosolids Land Application		
		_____ Unit Price		$_____
2B.	45 Acres	Seeding Services		
		_____ Lump Sum		$_____
3.	8 Hours	Coordination with USEPA Research Project		
		_____ Unit Price		$_____
4.	1.0 Million Gallons	Biosolids Subsurface Injection		
		_____ Unit Price		$_____

_____
Name of Bidder

TOTAL BASE BID, BASIS OF AWARD (SUM OF BID ITEMS 1 THRU 4):

$ _____

(In figures)

_____ Dollars

(In words)

WORK SCHEDULE

Earliest Land Application Start Date	Latest Land Application Completion Date	Estimated Biosolids to be Removed, Dry Tons
July 1, 2024	October 31, 2024	264

Seeding start date to occur after Latest Land Application Completion Date as required to establish crop.

SUPPLEMENTAL CONDITIONS

In the event that the product of a unit price and an estimated quantity does not equal the extended amount stated, the unit price will govern, and the correct product of the unit price and the estimated quantity shall be deemed to be the amount proposed. In the event the addition of the Proposal item extended amounts does not equal the Base Proposal Price, the corrected addition of all Proposal item extended amounts will govern and the District will correct the Base Proposal Price accordingly. Should the Proposal Schedule contain only a total price for an item and the item unit price is omitted, the District shall determine the item unit price by dividing the total price for the item by estimated quantity of work to be performed.

If the Proposal Schedule contains neither the item unit price nor the total price for an item, then it shall be deemed incomplete, and the Proposal shall be deemed non-responsive by the District.

Proposer acknowledges that quantities are not guaranteed, and final payment will be based on actual quantities determined as provided in the Agreement documents. The District reserves the right during the term of the Agreement to increase or decrease the quantity of biosolids to be removed. If the Contractor and the District agree to a change in the Proposal, a Contract Change Order will be issued to document the change and shall be authorized by both the Contactor and the District.

_____
Name of Bidder

LAS GALLINAS VALLEY SANITARY DISTRICT
101 Lucas Valley Road, Suite 300
San Rafael, California 94903

BID BOND

(NOTE: Bidders must use this form, or use of any other bid bond form may render a bid non-responsive)

KNOW ALL MEN BY THESE PRESENTS:

That we, as PRINCIPAL, and _____, a (sole proprietorship /corporation/partnership/joint venture) organized and existing under and by virtue of the laws of the State of _____ and an admitted surety insurer authorized to do business in the State of California, as SURETY, are held and firmly bound unto the Las Gallinas Valley Sanitary District, as OBLIGEE, in a penal sum equal to ten-percent (10%) the total bid price including the base bid and alternates specified in the proposal of the PRINCIPAL, to the OBLIGEE for the work described below, which penal sum is _____ _____ ($_____) lawful money of the United States of America, for the payment of which sum well and truly to be made, we, and each of us, bind ourselves, our heirs, executors, administrators, successors, and assigns, jointly and severally, firmly by these presents.

THE CONDITION OF THIS OBLIGATION IS SUCH that whereas the PRINCIPAL has submitted the accompanying proposal dated _____, _____ to the OBLIGEE, for the BIOSOLIDS LAND APPLICATION SERVICES 2024 project, JOB NO. 24580-01.

NOW THEREFORE, if the PRINCIPAL shall not withdraw said proposal within the ninety (90) day period following the opening of bids, and if the PRINCIPAL receives written notice that the BIOSOLIDS LAND APPLICATION SERVICES 2024 project, JOB NO. 24580-01, is awarded to the PRINCIPAL and shall, within seven (7) calendar days of receiving such notice: enter into a written contract with the OBLIGEE in the form prescribed in the bid package issued by the OBLIGEE concerning the BIOSOLIDS LAND APPLICATION SERVICES 2024 project, JOB NO. 24580-01; and give insurance and bond with good and sufficient sureties guaranteeing the faithful performance and proper fulfillment of such contract and guaranteeing payment for labor and materials used for performance of the contract as required by law; and file with the OBLIGEE all required documents and do all other thing required in accordance with the bid package issued by the OBLIGEE concerning the BIOSOLIDS LAND APPLICATION SERVICES 2024 project, 24580-01, for the contract between the PRINCIPAL and the OBLIGEE to become effective and for work to commence in accordance with the bid package issued by the OBLIGEE concerning the BIOSOLIDS LAND APPLICATION SERVICES 2024 project, JOB NO. 24580-01, or, in the event of withdrawal of the accompanying proposal within the ninety (90) day period following the opening of bids; or failure by the PRINCIPAL to enter into such contract with the OBLIGEE or to give the OBLIGEE such bonds or to file any other documents or to do any other things required in the bid package issued by the OBLIGEE for the BIOSOLIDS LAND APPLICATION SERVICES 2024 project, JOB NO. 24580-01, if the PRINCIPAL shall pay the OBLIGEE the difference between the total bid price in the accompanying proposal and the amount for which the OBLIGEE may procure the required performance, if the latter amount be

in excess of the former, together with all costs incurred by the OBLIGEE in again attempting to let the BIOSOLIDS LAND APPLICATION SERVICES 2024 project, JOB NO. 24580-01 and if the said PRINCIPAL shall fully reimburse and save harmless the OBLIGEE from any damage sustained by the OBLIGEE through failure of the PRINCIPAL to enter into the written contract or to file the required performance or labor and material bonds, or to file any other required documents or to do any other things required for the contract between the PRINCIPAL and the OBLIGEE to become effective and the work to commence in accordance with the bid package issued by the OBLIGEE concerning the BIOSOLIDS LAND APPLICATION SERVICES 2024 project, JOB NO. 24580-01, then this obligation shall be null and void; otherwise, it shall be and remain in full force and effect.

SURETY, for value received, hereby stipulates and agrees that no change, extension of time, alteration or addition to the terms of the bid or Contract Documents for the BIOSOLIDS LAND APPLICATION SERVICES 2024 project, JOB NO. 24580-01, or to the specifications included in the same, or to the work to be performed there under, or to the notice to bidders, or to any other documents concerning the BIOSOLIDS LAND APPLICATION SERVICES 2024 project, JOB NO. 24580-01, shall in anywise affect SURETY's obligation under this bond, and SURETY hereby waives notice of any such change, extension of time, alteration or addition to such bid or Contract Documents.

In the event suit is brought upon this bond by the OBLIGEE and judgment is recovered, the SURETY shall pay all costs incurred by the OBLIGEE in such suit, including a reasonable attorney's fee to be fixed by the Court.

IN WITNESS WHEREOF, the above-bound parties have executed this instrument under their several seals this_____ day of _____, _____, the name and corporate seals of each corporate party being hereto affixed and these presents duly signed by their undersigned representatives, pursuant to authority of their governing bodies.

(Corporate Seal) PRINCIPAL_____

By_____

(Acknowledgement) Title_____

SURETY_____

(Corporate Seal)

By_____
(Attorney-in-fact)

(Acknowledgement) Title_____

(NOTE TO SURETY COMPANY: A certified copy of unrevoked resolution of authority for the attorney-in-fact must be submitted with and attached to the executed bid bond.)

_____
Name of Bidder

LAS GALLINAS VALLEY SANITARY DISTRICT
101 Lucas Valley Road, Suite 300
San Rafael, California 94903

CONTRACTOR LICENSE INFORMATION

The bidder acknowledges that the license(s) required for performance of the BIOSOLIDS LAND APPLICATION SERVICES 2024 project, JOB NO. 24580-01, is a **Class A** license.

The bidder holds the following California Contractors License(s):

1. License No. _____, Class _____, Expiration Date _____
2. License No. _____, Class _____, Expiration Date _____
3. License No. _____, Class _____, Expiration Date _____
4. License No. _____, Class _____, Expiration Date _____
5. License No. _____, Class _____, Expiration Date _____

Bidder's Taxpayer Identification No. _____

Bidder's DIR Registration No. _____

THIS PAGE INTENTIONALLY LEFT BLANK

_____
Name of Bidder

LAS GALLINAS VALLEY SANITARY DISTRICT
101 Lucas Valley Road, Suite 300
San Rafael, California 94903

LIST OF PROPOSED SUBCONTRACTORS

In accordance with the requirements of the Subletting and Subcontracting Fair Practices, Act, California Public Contract Code Section 4100 and following, listed below are the name, business location, and the portion (type or trade) of the Project work to be subcontracted to each subcontractor that will perform a portion of the Project work (including special fabrication and installation of a portion of the work) valued in excess of one half (½) of one (1) percent of the total bid price. If the Project work includes construction of streets or highways, listed below are the name, business location, and the portion (type or trade) of the Project Work to be subcontracted to each subcontractor that will perform a portion of the Project work (including special fabrication and installation of a portion of the work) valued in excess of one half (½) of one (1) percent of the total Project bid price, or ten thousand dollars ($10,000), whichever is greater. Also listed below are the proposed subcontract dollar amount and current California Contractor's License Number(s) for each proposed subcontractor. Bids that fail to include complete proposed subcontractor information in accordance with this form and Public Contract Code Section 4100 and following may be deemed non-responsive.

In accordance with California Public Contract Code Section 4106, for any portion of the Project work with a value of more than one half (½) of one (1) percent of the total bid price for which no subcontractor is listed, or for which more than one subcontractor is listed, the bidder certifies by submission of its bid that the bidder is qualified to perform that portion of the Project work and that the bidder will perform that portion of the Project work with its own forces. The penalties listed in California Public Contract Code Section 4111 will apply to any substitution of another subcontractor for a subcontractor listed below except as permitted by the District in accordance with Section 4107 and following of the California Public Contract Code.

1. Subcontractor Name _____

   Contact: _____

   Phone No. _____ Email: _____

   Business Location_____

   Trade_____

   Subcontract Amount_____

   Current Contractor's License No(s). _____

   DIR Registration No. _____

_____
Name of Bidder

2. Subcontractor Name _____

Contact: _____

Phone No. _____ Email: _____

Business Location_____

Trade_____

Subcontract Amount_____

Current Contractor's License No(s). _____

DIR Registration No. _____

3. Subcontractor Name _____

Contact: _____

Phone No. _____ Email: _____

Business Location_____

Trade_____

Subcontract Amount_____

Current Contractor's License No(s). _____

DIR Registration No. _____

4. Subcontractor Name _____

Contact: _____

Phone No. _____ Email: _____

Business Location_____

Trade_____

Subcontract Amount_____

Current Contractor's License No(s). _____

DIR Registration No. _____

(Attach additional list as necessary.)

_____
Name of Bidder

LAS GALLINAS VALLEY SANITARY DISTRICT
101 Lucas Valley Road, Suite 300
San Rafael, California 94903

LIST OF MAJOR MATERIALS

Following are the names and addresses of the manufacturers of the following materials to be furnished for the project:

Material	Manufacturer	Address

Name of Bidder

Material	Manufacturer	Address

(Attach additional list as necessary.)

_____
Name of Bidder

LAS GALLINAS VALLEY SANITARY DISTRICT
101 Lucas Valley Road, Suite 300
San Rafael, California 94903

WORKERS COMPENSATION INSURANCE CERTIFICATION

By submitting its bid the bidder certifies as follows:

I am aware of the provisions of California Labor Code Section 3700 which require every employer to be insured against liability for workmen's compensation or to undertake self-insurance in accordance with the provisions of the Labor Code, and I will comply with such provisions before commencing performance of the work of this Contract.

Signed this _____ day of _____, 20____

_____
Bidder's Name

_____
Authorized Signature Date

_____
Title of Signatory

THIS PAGE INTENTIONALLY LEFT BLANK

_____
Name of Bidder

LAS GALLINAS VALLEY SANITARY DISTRICT
101 Lucas Valley Road, Suite 300
San Rafael, California 94903

NON-COLLUSION AFFIDAVIT

TO BE EXECUTED BY BIDDER
AND SUBMITTED WITH BID

STATE OF CALIFORNIA)
)
COUNTY OF _____)

_____, being first duly sworn, deposes and says that he or she is _____ of _____ _____, the party making the foregoing bid, that the bid is not made in the interest of, or on behalf of, any undisclosed person, partnership, company, association, organization, or corporation; that the bid is genuine and not collusive or sham; that the bidder has not directly or indirectly induced or solicited any other bidder to put in a false or sham bid, and has not directly or indirectly colluded, conspired, connived, or agreed with any bidder or anyone else to put in a sham bid, or that anyone shall refrain from bidding; that the bidder has not in any manner, directly or indirectly, sought by agreement, communication, or conference with anyone to fix the bid price of the bidder or any other bidder, or to fix any overhead, profit, or cost element of the bid price, or of that of any other bidder, or to secure any advantage against the public body awarding the contract of anyone interested in the proposed contract; that all statements contained in the bid are true; and, further, that the bidder has not, directly or indirectly, submitted his or her bid price or any breakdown thereof, or the contents thereof, or divulged information or data relative thereto, or paid, and will not pay, any fee to any corporation, partnership, company, association, organization, bid depository, or to any member or agent thereof to effectuate a collusive or sham bid.

_____
Signature of Bidder

(Acknowledgement)
Subscribed and sworn before me by _____, this _____

day of _____, _____.

(SEAL)

_____
Notary Public

_____
Name of Bidder

THIS PAGE INTENTIONALLY LEFT BLANK

_____
Name of Bidder

LAS GALLINAS VALLEY SANITARY DISTRICT
101 Lucas Valley Road, Suite 300
San Rafael, California 94903

DRUG-FREE WORKPLACE CERTIFICATION

By submitting its bid the bidder certifies compliance with Government Code Section 8355 in matters relating to providing a drug-free workplace. The above-named contractor or applicant will:

1. Publish a statement notifying employees that unlawful manufacture, distribution, dispensation, possession, or use of a controlled substance is prohibited and specifying actions to be taken against employees for violations, as required by Government Code Section 8355(a).

2. Establish a Drug-Free Awareness Program as required by Government Code Section 8355(b), to inform employees about all of the following:

   (a) The dangers of drug abuse in the workplace,
   (b) The person's or organization's policy of maintaining a drug-free workplace,
   (c) Any available counseling, rehabilitation and employee assistance programs, and
   (d) Penalties that may be imposed upon employees for drug abuse violations.

3. Provide as required by Government Code Section 8355(c), that every employee who works on the proposed contract:

   (a) Will receive a copy of the company's drug-free policy statement, and
   (b) Will agree to abide by the terms of the company's statement as a condition of employment on the contract.

Signed this _____ day of _____, 20____

_____
Bidder's Name

_____
Authorized Signature Date

_____
Title of Signatory

THIS PAGE INTENTIONALLY LEFT BLANK

_____
Name of Bidder

LAS GALLINAS VALLEY SANITARY DISTRICT
101 Lucas Valley Road, Suite 300
San Rafael, California 94903

DEBARMENT CERTIFICATION

By submitting its bid the bidder certifies in accordance with California Public Contract Code Section 6109 that neither the bidder nor any subcontractor included on the list of proposed subcontractors submitted with the bid is ineligible to perform work on public works projects pursuant to California Labor Code Sections 1777.1 or 1777.7. In accordance with California Public Contract Code Section 6109, contractors and subcontractors who are ineligible to perform work on public works projects pursuant to California Labor Code Sections 1777.1 or 1777.7 may neither bid on, be awarded or perform as a subcontractor on public works projects.

Signed this _____ day of _____, 20____

_____
Bidder's Name

_____
Authorized Signature Date

_____
Title of Signatory

THIS PAGE INTENTIONALLY LEFT BLANK

_____
Name of Bidder

LAS GALLINAS VALLEY SANITARY DISTRICT
101 Lucas Valley Road, Suite 300
San Rafael, California 94903

STATEMENT OF EXPERIENCE OF BIDDER

(To Accompany Bid)

The undersigned Bidder certifies that it is, at the time of bidding, and shall be, throughout the period of the contract, licensed under the provisions of Chapter 9, Division 3, of the Business and Professions Code of the State of California, to do the type of work contemplated in the Contract Documents. Bidder further certifies that it is skilled and regularly engaged in the general class and type of work called for in the Contract Documents.

The Bidder represents that it is competent, knowledgeable, and has special skills concerning the nature, extent, and inherent conditions concerning the work to be performed. Bidder further acknowledges that there are certain inherent conditions existent in the construction of the particular facilities which may create, during the construction program, unsafe conditions hazardous to persons and property. Bidder expressly acknowledges that it is aware of such risks and that it has the skill and experience to foresee and to adopt protective measures to adequately and safely perform the construction work with respect to such hazards.

A. ESSENTIAL REQUIREMENTS FOR QUALIFICATION

If the answer to any of questions 1 through 3 is “no”, or if the answer to any of questions 4 through 7 is “yes”, the Bidder will be deemed ineligible or not responsible for purposes of the Contract.

1. Bidder possesses a valid and current California Contractor’s license as required for the project for which it intends to submit a bid.
   □ Yes □ No

2. Bidder will comply with and provide all insurance as defined in Section 8.8, Insurance, of then General Conditions.
   □ Yes □ No

3. Bidder has current Workers’ Compensation insurance coverage as required by the Labor Code or is legally self-insured pursuant to Labor Code section 3700 et. seq.
   □ Yes □ No

4. Has your contractor’s license been revoked at any time in the last five (5) years?
   □ Yes □ No

5. Has a surety firm completed a contract on your behalf, or paid for completion because your firm was default terminated by the project owner within the last five (5) years?
   □ Yes □ No

6. At the time of submitting this qualification form, is your firm ineligible to bid on or be awarded a public works contract, or perform as a subcontractor on a public works contract, pursuant to either Labor Code section 1777.1 or Labor Code section 1777.7?
□ Yes □ No

7. At any time during the last five (5) years, has your firm, or any of its owners or officers been convicted of a crime involving the awarding of a contract of a government construction project, or the bidding or performance of a government contract?
□ Yes □ No

B. COMPANY EXPERIENCE

The Bidder has been engaged in the contracting business, under the present business name for _____ years and has experience in work of a nature similar to this project which extends over a period of _____ years (Bidder must show **at least five (5) years** of related experience).

The Bidder, as a Contractor, has never failed to satisfactorily complete a contract awarded to it, except as follows:

_____

_____

For the District to consider the Bidder properly experienced in work of similar nature to this project, the Bidder must list at least **$1,500,000** in construction volume on **no more than five (5)** projects completed **within the last five (5) years** of the following types of projects:

1. **Biosolids land application services, with experience monitoring the agronomic application of biosolids, checking nutrient loading, and annual biosolids reporting requirements.**

The Bidder can include project(s) currently under construction, but only the total amount paid by the District(s) as of three (3) months prior to the bid date on uncompleted project(s) can be included in the construction volume for purposes of this certification. The Bidder is allowed to list up to a maximum of five (5) projects of the types listed above, that combined, will add up to at least the cost in completed volume of work listed above. Any projects listed below which are not as defined above will not be considered by the District in meeting this experience requirement. For example, pump stations are not considered a treatment plant.

Bidder also certifies that Bidder self-performed at least forty percent (40%) of the Work on each of the projects listed below. The District considers this level of past self-performance demonstrates a benefit to a Project in terms of better control of cost, schedule and safety.

If the Bidder is a Joint Venture of two or more companies, each participant in the Joint Venture shall meet this prior project experience requirement and provide project information for each Joint Venture participant in the format below.

_____
Name of Bidder

1. **Project Name:**_____

Owner:_____

Construction Cost: $_____

Construction Time:_____ **Calendar Days**

Owner's Representative:_____

Owner's Telephone No.:_____

Date of Substantial Completion:_____

2. **Project Name:**_____

Owner:_____

Construction Cost: $_____

Construction Time:_____ **Calendar Days**

Owner's Representative:_____

Owner's Telephone No.:_____

Date of Substantial Completion:_____

3. **Project Name:**_____

Owner:_____

Construction Cost: $_____

Construction Time:_____ **Calendar Days**

Owner's Representative:_____

Owner's Telephone No.:_____

Date of Substantial Completion:_____

4. **Project Name:**_____

Owner:_____

Construction Cost: $_____

Construction Time:_____ **Calendar Days**

Owner's Representative:_____

Owner's Telephone No.:_____

Date of Substantial Completion:_____

5. **Project Name:**_____

Owner:_____

Construction Cost: $_____

Construction Time:_____ **Calendar Days**

Owner's Representative:_____

Owner's Telephone No.:_____

Date of Substantial Completion:_____

_____
Name of Bidder

C. SAFETY QUALIFICATION CRITERIA

The following information will be used to determine if you meet the minimum safety requirements for this project. To qualify to bid and be awarded the project, the contractor shall have a safety record that meets or exceeds the one of the three following safety criteria:

1. If the Contractor's three-year average Workers' Compensation Experience Modification (EMR) is equal to or less than 100%, the contractor meets the minimum safety requirements for this project;
2. If the Contractor's three-year average EMR is greater than 100%, the Contractor's three-year average Recordable Incident Rate (RIR) must not be greater than 3.8 and three-year average Lost Time Incident Rate (LTIR) must not be greater than 1.7 to meet the minimum safety requirements for this project;
3. If the Contractor only meets either the three-year average RIR or LTIR value, the Contractor shall be required to hire at no additional cost to the District a mutually acceptable safety consultant who will prepare a project specific safety plan, conduct random weekly inspections of the Contractor's activities to ensure conformance with the safety plan and prepare and submit a weekly report to the District summarizing the results of each inspection. The contractor's shall adhere to the safety plan. The contractor's activities shall be adjusted immediately to address any issues resulting from the weekly safety inspection.

Contractors that cannot meet any of the three safety criteria above are not eligible to work for the District.

The Bidder shall list its Experience Modification Rate, Lost time Incident Rate, and Recordable Incident Rate for the last three complete years (available from your insurance carrier).

Year	EMR	RIR	LTIR
_____	_____	_____	_____
_____	_____	_____	_____
_____	_____	_____	_____
	_____AVG	_____AVG	_____AVG

To verify the above information, the District will contact the Bidder's Workers' Compensation Insurance carrier. The Bidder shall authorize its carrier to release this information. Failure to release this information will result in the bid being non-responsive and result in automatic disqualification of the bid.

Workers' Compensation Insurance Company:_____
Contact Person for Insurance Company:_____
Telephone Number:_____

_____
Name of Bidder

Signed this _____ day of _____, 20 ____.

_____
Name of Bidder

_____
Contractor's License No.

_____
Expiration Date

_____
Signature of Bidder

_____
Title of Signatory

D. FINANCIAL QUALIFICATIONS

(TO BE SUBMITTED WITH BID)

Provide evidence that the Bidder has sufficient financial resources to provide all work necessary to complete the project including construction, start-up, and warranty services.

A. Bidder must provide Section FINANCIAL QUALIFICATIONS to assist the District in determining the Bidder's financial condition.

B. Bidder must provide a letter from its Surety or Surety Broker which certifies that Bidder's current bonding capacity is sufficient for the bonding requirements for this Project.

C. Bidder shall identify any claims filed in court or arbitration against Bidder in the past five years which concerned Bidder's work on a construction project. For each claim, if any, the Bidder shall provide the project name, date of the claim, name of the claimant, a brief description of the nature of the claim, the court in which the case was filed and a brief description of the status of the claim (pending or, if resolved, a brief description of the resolution). Are there any pending claims against your company that should you lose the claim(s), would adversely affect your financial position or your ability to meet your obligations if awarded the contract for this project? If so, please explain.

Claims Filed Against Bidder

Project Name:_____

Date of Claim:_____

Claimant Name:_____

Court:_____

Status of Claim:_____

Explanation:_____

_____

_____

Bidder shall also identify any claims filed in court or arbitration by Bidder against a project owner in the past five years concerning work on a project or payment for a contract. For each claim, if any, the Bidder shall provide the project name, date of the claim, a brief description of the nature of the claim, the court in which the case was filed and a brief description of the status of the claim (pending or, if resolved, a brief description of the resolution). Are there any pending claims filed by your company against a project owner that should you lose the claim(s), would adversely affect your financial position or your ability to meet your obligations if awarded the contract for this project? If so, please explain.

Claims Filed By Bidder

_____
Name of Bidder

Project Name:_____

Date of Claim:_____

Claimant Name:_____

Court:_____

Status of Claim:_____

Explanation:_____

_____

_____

All financial information provided by Bidder that is marked “Confidential” or “Proprietary” shall be handled by the District in accordance with Public Records Act.

The undersigned hereby states that all representations regarding the Bidder’s Company Experience, and Safety Qualification Information are correct and true.

Signed this _____ day of _____, 20____

_____
Bidder’s Name

_____ _____

Authorized Signature Date

_____
Title of Signatory

_____
Name of Bidder

LAS GALLINAS VALLEY SANITARY DISTRICT
101 Lucas Valley Road, Suite 300
San Rafael, California 94903

FINANCIAL QUALIFICATIONS

BIDDER'S REFERENCES AND CREDIT REPORT

The Contractor shall submit with his/her bid a credit report, current within five (5) working days of the bid opening date for this project. For privacy purposes, the report may be submitted in an envelope marked "CONFIDENTIAL". To be considered a responsible bidder on this project, either the Contractor's credit report shall indicate a Dun & Bradstreet credit risk rating specified below **or** the Contractor's bank shall issue a financial statement on the following page. If the Contractor is a Dun & Bradstreet member, a copy of the current Dun & Bradstreet rating form showing a rating not less than the specified rating.

The specified Dun and Bradstreet credit risk rating for this project is 3A2 or better.

If the Contractor is not a Dun & Bradstreet member, an acceptable credit report shall consist of the submittal of the District's Financial Statement Form (which follows) executed by the Contractor's bank. Failure to submit the required report with the bid for this project shall cause the bid to be rejected. Failure to possess the required financial strength and credit risk rating may cause the bid to be rejected. The District shall request confirmation of the Contractor's rating from Dun & Bradstreet Information Services. The sufficiency of the Bidder's financial qualifications will be determined solely by the District and its decision shall be final.

Reference is hereby made to the following bank or banks as to the financial responsibility of the Bidder:

Name of Bank	Address
_____	_____
	_____
_____	_____
	_____

Reference is hereby made to the following surety companies as to the financial responsibility and general reliability of the Bidder:

Name of Surety Company _____

_____

Signature of Bidder _____

Title _____

Company _____

Address _____

_____
Name of Bidder

FINANCIAL STATEMENT FORM

_____ has an established deposit

and borrowing relationship with_____ since
(Bank)

_____. Both business account and credit accommodations are maintained in
(Date)

a highly satisfactory manner. Based on my knowledge of _____ 's
(Contractor)

Average monthly business account balances and its credit worthiness, I believe its general financial strength and credit rating meet or exceed the Dun & Bradstreet alphanumeric rating of not less than **3A2**.

_____
Contractor Company Name

_____
Contractor Representative, Printed Name

_____ _____
Contractor Representative, Signature Date

_____
Bank Name

_____
Business Address

_____
City/State/Zip Code

_____
Bank Representative, Printed Name

_____ _____
Bank Representative, Signature Date

Name of Bidder

Following are two Dun & Bradstreet rating component sheets to assist in the evaluation of the responsible bidder's tangible net worth and credit worthiness.

D & B RATING KEY

Quickly assesses a company's size and composite credit appraisal, e.g., a company rated 3A3 has a worth of $1,000,000 - $9,999,000 based on an interim or fiscal balance sheet and a composite credit appraisal of 'Fair'.

Key to Employee Range

ER1	1,000 or more
ER2	500-999
ER3	100-499
ER4	50-99
ER5	20-49
ER6	10-19
ER7	5-9
ER8	1-4
ERN	Not Available

Rating Classification				Composite Credit Appraisal			
Based on Worth from Interim or Fiscal Balance Sheet				HIGH	GOOD	FAIR	LIMITED
5A	$50,000,000	and	Over	1	2	3	4
4A	10,000,000	to	$49,999,999	1	2	3	4
3A	1,000,000	to	9,999,999	1	2	3	4
2A	750,000	to	999,999	1	2	3	4
1A	500,000	to	749,999	1	2	3	4
BA	300,000	to	499,999	1	2	3	4
BB	200,000	to	299,999	1	2	3	4
CB	125,000	to	199,999	1	2	3	4
CC	75,000	to	124,999	1	2	3	4
DC	50,000	to	74,999	1	2	3	4
DD	35,000	to	49,999	1	2	3	4
EE	20,000	to	34,999	1	2	3	4
FF	10,000	to	19,999	1	2	3	4
GG	5,000	to	9,999	1	2	3	4
HH	up	to	4,999	1	2	3	4

Rating Classification				Composite Credit Appraisal		
Based on Number of Employees				GOOD	FAIR	LIMITED
1R	10 employees	and	Over	2	3	4
2R	1	to	9	2	3	4

WHAT THE RATINGS MEAN

5A to HH – ‘5A’ to ‘HH’ Ratings reflect company size based on worth or equity as computed by D&B. Company size can be an effective indicator of credit capacity. These Ratings are assigned to businesses that have supplied D&B with a current financial statement.

1R and 2R – the ‘1R’ and ‘2R’ Rating categories reflect company size based on the total number of employees for the business. They are assigned to business files that do not contain a current financial statement.

Composite Credit Appraisal: The Composite Credit Appraisal is a number, one through four, that makes up the second half of the company’s rating and reflects D&B’s overall assessment of that firm’s credit worthiness. The Composite Credit Appraisal is based on analysis by D&B of company payments, financial information, public records, business age and other important factors (where available).

A ‘2’ is the highest Composite Credit Appraisal a company not supplying D&B with current financial information can receive.

Rating: May also include the ‘- -’ symbol, or absence of a D&B Rating. This symbol should not be interpreted as indicating that credit should be denied. It means that the information available to D&B does not permit us to classify the company within our Rating key and that further inquiry should be made before reaching a credit decision. Some reasons for using the ‘- -’ symbol includes: deficit net worth, bankruptcy proceedings, lack of sufficient payment information or incomplete history indicator.

Date Applied: Allows you to review a company’s rating changes over time (the last 10 Rating changes or any changes since 1991 if less than 10 are provided).

ER (Employee Range): Certain lines of business do not lend themselves to classification under the D&B Rating system. Instead, we assign these types of businesses an Employee Range symbol based on the number of people employed. No other significance should be attached to this symbol. For example, a Rating of 'ER7' means there are between five and nine employees in the company. 'ERN' should not be interpreted negatively. It simply means we do not have information indicating how many people are employed at this firm.

DS (DUNS) Support: This indicates that the information available to D&B does not permit us to classify the company within our Rating key. When ordering these reports an investigation can be performed and results sent to you within four working days, at no additional charge.

INV (Investigation Being Conducted): When an ‘INV’ appears, it means an investigation is being conducted on this business to get the most current details.

_____
Name of Bidder

LAS GALLINAS VALLEY SANITARY DISTRICT
101 Lucas Valley Road, Suite 300
San Rafael, California 94903

SITE VISIT AFFIDAVIT TO BE EXECUTED BY BIDDER, NOTARIZED AND SUBMITTED WITH BID

(To Accompany Bid)

State of California)
) ss.
County of _____)

_____, being first duly sworn, deposes and says that
(Contractor's Authorized Representative)

he or she is _____ of _____,
(Title of Representative) (Contractor's Legal Name)

the party making the foregoing Bid, has visited the Project site(s) as described in the Contract Documents and has examined and familiarized themselves with the existing conditions, as well as all other conditions relating to the construction which will be performed. The submitting of a Bid shall be considered an acknowledgment on the part of the Bidder of familiarity with conditions at the site of the Work and that the site examination has provided adequate and sufficient information related to existing conditions which may affect cost, progress or performance of the Work.

_____ _____
Signature of Authorized Representative Type/Print Name of Bidder

_____
Type/Print Representative's Name

_____ _____
Type/Print Title Date

(Acknowledgement)
Subscribed and sworn before me by _____, this _____

day of _____, _____.

(SEAL) _____
Notary Public

THIS PAGE INTENTIONALLY LEFT BLANK

_____
Name of Bidder

LAS GALLINAS VALLEY SANITARY DISTRICT
101 Lucas Valley Road, Suite 300
San Rafael, California 94903

BIDDER'S SIGNATURE PAGE

By my signature on this proposal I certify, under penalty of perjury under the laws of the State of California, that the information submitted with this proposal for the BIOSOLIDS LAND APPLICATION SERVICES 2024 project, JOB NO. 24580-01, which information includes, but is not limited to, the Bidder's Check List, Proposal Cover Page and Bid Schedule, Acknowledgement of Bid Addenda, Bid Bond, Contractor License Information, List of Proposed Subcontractors, Workers Compensation Insurance Certification, Non-Collusion Affidavit, Drug-Free Workplace Certification, Debarment Certification, Statement of Experience of Bidder, Financial Qualifications, and Site Visit Affidavit are accurate, true and correct, and are submitted in accordance with the requirements of the bid package issued by the Las Gallinas Valley Sanitary District concerning the BIOSOLIDS LAND APPLICATION SERVICES 2024 project, JOB NO. 24580-01, and applicable law. By my signature on this proposal I further certify that I am legally authorized to bind the bidder in accordance with the requirements of the bid package.

Date: _____

_____
(Typed or printed name)

_____
(Signature)

_____
(Bidder)

Bidder Business Address (Street, City, State and Zip Code)

_____

_____

Bidder Business Phone No.: _____

Bidder Business Fax No.: _____

Bidder Email Address: _____

THIS PAGE INTENTIONALLY LEFT BLANK

APPENDIX A

SAFE WORK REQUIREMENTS

THIS PAGE LEFT INTENTIONALLY BLANK

Las Gallinas Valley Sanitary District

Contractor Health and Safety Program

45950 Hotchkiss St. • Fremont, CA 94539• (510) 651-8289 • du-all.com

Page Left Blank

Contractor Acknowledgement

I have read and fully understand the requirements of this Contractor Health and Safety Program and agree to comply.

Name: _____

Signature: _____

Company:_____

Date: _____

1.0 TABLE OF CONTENTS

Section ..... **Page**

1.0 TABLE OF CONTENTS IV
2.0 REVISION HISTORY LOG V
3.0 POLICY 1
4.0 SCOPE 2
5.0 FACILITY MANAGEMENT RESPONSIBILITIES 3
6.0 CONTRACTOR RESPONSIBILITIES 3
7.0 SPECIFIC SITE HAZARDS 5
8.0 SPECIFIC SAFETY AND HEALTH PROGRAM REQUIREMENTS 7
CODE OF SAFE PRACTICES 7
9.0 SAFETY COMMUNICATIONS 22
10.0 INJURY AND ILLNESS REPORTING 23
11.0 PERIODIC INSPECTIONS 23
12.0 HAZARD IDENTIFICATION AND CORRECTION 24
13.0 RECORDKEEPING REQUIREMENTS 24
14.0 PERIODIC PROGRAM EVALUATION 25

APPENDIX A- Wastewater Treatment Plant Map

APPENDIX B- Definitions

2.0 REVISION HISTORY LOG

Date	Name	Section	Description
02/2024	Du-All Safety	All	New program draft
03/2024	Du-All Safety	7.0/Appendix	Updated specific site hazards and facility map.

3.0 POLICY

It is the policy of the Las Gallinas Valley Sanitary District to provide employers, District employees and worker representatives with a sound, flexible framework for addressing safety and health issues in diverse workplaces. This Contractor Safety Program shall be used as a proactive approach to managing contractor workplace safety and health. This policy requires commitment to safety and health and the cooperative atmosphere between management, contractors and the Las Gallinas Valley Sanitary District employees. The chart below outlines the core elements of the Las Gallinas Valley Sanitary District's Contractor Health and Safety Program.

Management Leadership	• Top management demonstrates its commitment to continuous improvement in safety and health, communicates that commitment to workers, and sets program expectations and responsibilities. • Managers at all levels make safety and health a core organizational value, establish safety and health goals and objectives, provide adequate resources and support for the program, and set a good example.
Worker Participation	• Workers and their representatives are involved in all aspects of the program—including setting goals, identifying and reporting hazards, investigating incidents, and tracking progress. • All workers, including contractors and temporary workers, understand their roles and responsibilities under the program and what they need to do to effectively carry them out. • Workers are encouraged and have means to communicate openly with management and to report safety and health concerns without fear of retaliation. • Any potential barriers or obstacles to worker participation in the program (for example, language, lack of information, or disincentives) are removed or addressed.
Hazard Identification and Assessment	• Procedures are put in place to continually identify workplace hazards and evaluate risks. • An initial assessment of existing hazards and control measures is followed by periodic inspections and reassessments to identify new hazards.
Hazard Prevention and Control	• Employers and workers cooperate to identify and select options for eliminating, preventing, or controlling workplace hazards. • A plan is developed that ensures controls are implemented, interim protection is provided, progress is tracked, and the effectiveness of controls is verified.
Education and Training	• All workers are trained to understand how the program works and how to carry out the responsibilities assigned to them under the program. • All workers are trained to recognize workplace hazards and to understand the control measures that have been implemented.
Program Evaluation and Improvement	• Control measures are periodically evaluated for effectiveness. • Processes are established to monitor program performance, verify program implementation, identify program deficiencies and opportunities for improvement, and take actions necessary to improve the program and overall safety and health performance.
Coordination and Communication on Multiemployer Worksites	• The host employer and all contract employers coordinate on work planning and scheduling to identify and resolve any conflicts that could impact safety or health. • Workers from both the host and contract employer are informed about the hazards present at the worksite and the hazards that work of the contract employer may create on site.

4.0 SCOPE

This program applies to all general contractors and sub-contractors and performing work for the Las Gallinas Valley Sanitary District. Before the start of any on-site work, the host employer and contractor or subcontractor shall establish their respective safety and health responsibilities and obligations, as well as procedures for coordinating these responsibilities and communicating safety and health information effectively.

Contractors or subcontractors working for the Las Gallinas Valley Sanitary District shall:

a. Comply with all applicable federal, state, and local safety orders in the performance of any work on District projects.

b. Comply with all safety regulations and procedures listed in this Contractor Health and Safety Program.

c. Take any additional precautions necessary to prevent injury or damage to persons, property, or interference with District operations.

Contractors and subcontractors are responsible for notifying employees, subcontractors, and invitees of these District Safe Work Policies. No work within District facilities or on District contract work sites shall begin prior to such notification. Contractors and subcontractors shall not allow a new employee or new subcontractor to begin work on District projects without having conducted a full and proper safety orientation.

Contractors and subcontractors performing work at the Wastewater Treatment Plant facility, lift stations or sewage conveyance systems shall schedule a safety orientation session for their site Superintendent and other contractor-designated personnel with the Authorized District Representative prior to commencing work. This orientation session shall include:

a. Emergency response and evacuation procedures.

b. An explanation of applicable District safety policies, and any unique and inherent hazards of District facilities. Site specific hazards are identified in Section 7 of this Contractor Health and Safety Program.

c. Traffic control planning and execution.

It is the responsibility of the contractor's or subcontractor’s Superintendent or designated personnel to orient and so inform all personnel under the contractor’s or subcontractor’s supervision. The District may, in its sole discretion, either temporarily or permanently remove a contractor’s or subcontractor’s employee from District work and/or terminate the contractor’s or subcontractor’s right to proceed for any violation of applicable Cal/OSHA General Industry and Construction Industry Safety Orders or these District Safe Work Policies.

5.0 FACILITY MANAGEMENT RESPONSIBILITIES

Las Gallinas Valley Sanitary District Facility Management is responsible for implementation of the Contractor Health and Safety Program. Facility Management responsibilities and duties include but are not limited to:

a. Communicate to temporary and contract employers and workers the commitment to provide the maximum level of safety and health protection.

b. Provide a copy of the Health and Safety Program to all contractors.

c. Inform contract employees of the Emergency Action Plan procedures to follow including building/facility evacuation route maps, assembly areas and the requirement to follow orders to evacuate.

d. Identify any safety and health qualifications and certifications needed by on-site workers and ensure they meet such requirements.

e. Provide sufficient resources to implement the Health and Safety program.

f. Periodically review the program for effectiveness and implement changes as needed.

g. Document these reviews in writing and maintain all records.

h. Before beginning on-site work (including, where appropriate, as part of requests for proposals, bids, and contracts), clarify each employer's responsibilities and obligations with respect to safety and health, such as:

    - Providing written copies of required safety programs and plans
    - Providing necessary training and education to workers
    - Selecting, providing, and maintaining any Personal Protective Equipment (PPE).
    - Providing any required medical surveillance or evaluations.
    - Recording and reporting any injuries or illnesses.
    - Outline the procedures and processes for coordinating safety and health responsibilities, as well as and the procedures for communicating between the host employer and contractor or subcontractor.

6.0 CONTRACTOR RESPONSIBILITIES

Contractors and subcontractors are responsible to follow the requirements and procedures outlined in this program. Responsibilities and duties include but are not limited to:

a. Provide Las Gallinas Valley Sanitary District with a copy of the employer's written Injury and Illness Prevention Program containing the key elements outlined in Cal CAL/OSHA Title 8, CCR Section 3203.

b. Provide Las Gallinas Valley Sanitary District with a copy of any other required written safety program or plan including but not limited to:

- Fall Protection
- Confined Space Entry
- Respiratory Protection
- Hot Work
- Hazard Communication
- Bloodborne Pathogen/Exposure Control
- Heat Illness Prevention
- LOTO
- Silica Exposure Control
- Traffic Control Plan
- Covid 19 Prevention

c. Before beginning on-site work, the contractor or subcontractor gives the host employer similar information about measures, programs, and procedures to be used to control hazards associated with their workers' work, and to ensure they comply with applicable Cal/OSHA standards.

d. Identify any safety and health qualifications and certifications needed by on-site workers and ensure they meet such requirements.

e. Work safely and follow Cal/OSHA safety standards and Las Gallinas Valley Sanitary District's operating policies, procedures, and safety programs.

f. Coordinate access to the facility with Las Gallinas Valley Sanitary District Facilities Management.

g. Perform periodic documented inspections to identify and correct hazards. Evidence of documented inspections shall be provided to Las Gallinas Valley Sanitary District upon request.

h. Report to Las Gallinas Valley Sanitary District Facility Management any hazard detected requiring further action to correct.

i. Report all occupational related injuries, illness or exposures to the Las Gallinas Valley Sanitary District Facility Management promptly.

j. Selecting, providing, and maintaining employee PPE.

k. Providing required medical assessments and surveillance.

l. Provide required employee safety training and education to affected and authorized employees and supervisors.

m. Provide accessible first aid supplies and if applicable, eye wash supplies spill clean-up supplies/equipment and portable fire extinguishers.

n. Ensure all tools and equipment in use is inspected periodically, complies with all applicable Cal/OSHA, ANSI, ASME, NIOSH or other regulating agency requirements.

o. Exchanging data on metrics each employer has tracked and using this data to evaluate the program's effectiveness at identifying and eliminating or controlling hazards.

7.0 SPECIFIC SITE HAZARDS

Contractors and subcontractors performing work at the Wastewater Treatment Plant facility, lift stations or sewage conveyance systems shall be informed if the site-specific hazards present. Site specific hazards include but are not limited to the following:

DISTRICT FACILITIES AND EQUIPMENT

Contractor's use of District instruments, tools, ladders, scaffolding or other equipment is not permitted except in cases of emergency as determined by a District supervisor or by permission from a senior Manager of the District.

Employee drinking water shall be supplied by the contractor or subcontractor. ***Do Not Drink Water from Hose Connections at any District Facility*****.** Hose bib connections are located throughout the treatment plant. Most of these bibs supply treated wastewater and may or may not be posted with signs reading "Do Not Drink." In any case, ***never*** drink water from hose bibs or hoses.

Water lines throughout the treatment plant are color coded (when not stainless steel) and labeled as follows:

- Purple- Recycle Water Piping
- Blue- Domestic Water Piping
- Grey- Service Water Piping (Plant Effluent)

Hose connections may be used to wash down equipment. Never hose down electrical or heated equipment of any kind. If an employee has used a gray or purple water hose for wash down, he/she should, when done, immediately wash their hands in domestic water with soap and water.

NEVER make any connection to any water line without first verifying with the **Authorized District Representative** that contamination of the water lines will not occur.

ELECTRICAL SUPPLY SYSTEMS

The treatment plant's Electrical Supply System consists of one 1 MW and two 65kW Gas Microturbine Generators, one 500kW diesel oil engine driven standby generator and one 380 KW trailer mounted standby generator, and solar power. All electrical power generated in the plant and PG&E power (beyond their transformer) is 480-volt, 3-phase, 60 Hz electricity and is delivered to one 480-volt switchgear panel. This panel is interconnected by cables and protected by breakers, relays, and monitoring devices. Electricity is dispersed from the switchgear through breakers and cables to motor control centers (MCC's), to power panels, to transformers (voltage reducers), to lighting panels and to motor driven pumps and equipment. Lockable control stations are located at each piece of equipment. 480-volt, 208-volt and 120-volt electricity is used in the plant. Contact the duty operator prior to working on any piece of electrical equipment. Electricity is hazardous and can burn or kill people. All work on electrical systems shall be done in accordance with the State of California, CAL/OSHA, Article 33, Electrical Requirements for construction work, Low Voltage Electrical Safety Orders.

FERROUS CHLORIDE SYSTEMS

The Ferrous Chloride System consists of a positive displacement pump with feed rate adjustment. Shut-off valves are located before and after the pump. Before working on this system, close all valves and disconnect the pump from electricity. Ferrous Chloride is a dangerous chemical which will attack the skin, eyes and the mucous membranes of the mouth, throat, and lungs. Contact the plant duty operator prior to working on this system.

DIGESTER GAS SYSTEM

The Digester Gas System consists of one steel tank, associated piping, compressors, flare, etc. Sludge is bacterially reduced in the tanks creating principally methane (CH) and other combustible hazardous gases, including hydrogen sulfide (H2S). Hydrogen sulfide is toxic at very low concentrations. These gases are contained by the tank covers and piping which is located on overhead racks, in pipe trenches and buried throughout the plant. The gases are burned in two large turbines driving generators to make electricity for the plant. Heat from the two turbines is captured and piped to the digesters to heat the sludge, speeding up the digestion process. Digesters and the stored gases within them are hazardous. No smoking, cutting, or spark generating equipment is allowed on or within ten feet of any digester. Contact the duty operator prior to working on digesters.

HYPOCHLORITE SYSTEM

Hypochlorite, or concentrated chlorine bleach (12.5%), is used to disinfect, or kill bacteria and virus in the final effluent (water) discharged from the plant. Two tanks, each 7,000 gallons are used to store hypochlorite. Piping, valves, pumps, strainers (filters) and flow-measuring and control equipment make up the system. Hypochlorite

will attack clothing, skin, eyes and mucous membranes of the nose, mouth, throat and lungs. Contact the duty operator prior to working on the hypochlorite system.

SODIUM BISULFITE

Sodium bisulfite is used when neutralizing sodium hypochlorite. Two 4,350 gallon tanks are used to store sodium bisulfite. Piping, valves, pumps, strainers (filters) and flow-measuring and control equipment make up the system. Sodium bisulfite is an irritant to eyes, skin and mucous membranes. Inhalation of mist may cause irritation to respiratory tract. Contact the duty operator prior to working on the sodium bisulfite system.

GENERAL HAZARDS

Throughout District's treatment plant and facilities there are a number of extremely hazardous elements considered to be dangerous to humans and the environment. They include, but are not limited, to:

- Permit Required Confined Spaces
- Flammable gas and petroleum.
- H2S (hydrogen sulfite)
- Deep pools of liquid sewage which are rarely patrolled, and for which self-rescue is unlikely
- Automatic start equipment
- HBV (Hepatitis B Virus)
- Biting and stinging insects and animals

8.0 SPECIFIC SAFETY AND HEALTH PROGRAM REQUIREMENTS

CODE OF SAFE PRACTICES

All employees are expected to perform their jobs to the best of their ability as well as perform them in a safe manner. It is critical that employees do not circumvent safety features and employ unsafe work behaviors that can cause them or others to be at risk. CAL/OSHA requires that we furnish employees a place of employment "free from known and recognized hazards and unsanitary conditions that are causing or are likely to cause death or serious physical harm to employees."

Employee responsibilities for safety include the following:

a. Practice safe work habits and follow your supervisor's instructions, company safety policies and Cal/OSHA regulations.

b. Report unsafe conditions to your supervisor immediately.

c. Wear and maintain appropriate PPE and other safety equipment in sanitary and usable condition as required by your employer and in accordance with manufacturer's recommendations.

d. Maintain equipment in good condition with all safety features in place when in operation. Notify your supervisor if problems develop. Do not try to fix or jury rig equipment in the field.

e. Report all incidents, accidents and near misses to your supervisor immediately, whether or not an injury resulted.

f. Participate in safety by attending toolbox talks and other meetings as required by your supervisor. Your suggestions for improvement will assist in making our program more effective.

Emergency Action Plan (EAP)

Contractors and subcontractors shall be responsible for providing first aid and medical treatment for their employees and for compliance with the first aid requirements specified in Cal/OSHA Construction Safety Title 8 CCR Section 1512, Emergency Medical Services. Contractors shall be responsible for making prior arrangements for emergency medical care and for transportation of injured Contractor personnel.

Contractors and subcontractors shall plan and prepare for anticipated emergencies. In preparation for an on-site emergency, the contractor or subcontractor will institute the following procedures:

a. Establish a method of emergency notification at the beginning of each job so that any worker can raise the alarm, alerting their supervisor and appropriate management of an emergency.

b. Post and communicate this procedure to everyone on site. Las Gallinas Valley Sanitary District Facility Management will provide required information and resources to accomplish this.

c. Establish a method to notify all workers on site of the need to evacuate the building/facility. Fire alarm pull stations, air horns and two-way radios are common options.

d. Designate primary and secondary assembly areas for all workers to gather in the event of an emergency evacuation. This will allow each contractor to ensure that their employees have gotten out and are accounted for.

e. Post these three emergency telephone numbers. In most cases 911 will get response from all three services, but it may vary by job site location.

    - Police
    - Fire
    - Medical Response Team

f. When cellular service is not available, install a hard wire phone. Post emergency phone numbers at the telephone's location, along with the address of the job site.

g. Designate a person to direct emergency crews from the gate to the specific emergency area.

Personal Protective Equipment (PPE)

The employer is required to instruct employees when to wear PPE. Supervisors are responsible for enforcing the use of PPE by all employees. PPE is considered the last line of defense providing limited protection to employees from injury or exposure. The contractor or subcontractor are required to perform a job hazard analysis to identify hazards and engineering and administrative hazard controls. If the hazard is not reduced to an acceptable level, PPE must be used. The following PPE may be required by the Las Gallinas Valley Sanitary District while performing work on Las Gallinas Valley Sanitary District facilities:

- Head, eye and face protection
- Body protection
- Hand protection
- Ergonomic protection
- Hearing protection
- Safety boots or shoes
- High visibility apparel
- Fall protection
- Respiratory protection

Fire Prevention

Fire prevention is of the highest priority. Contractors and subcontractors shall take appropriate measures to prevent fires at all times. Smoking is not allowed on any District facility at any time.

When work is being performed which generates sparks or open flames, the contractor or subcontractor will provide a fire watch, a person trained in the use of appropriate fire-fighting equipment, as needed, and whose only task is to observe and extinguish fires.

A District "Hot Work" permit must be filled out and turned into the Collection System / Safety Manager, or Plant Manager when the Safety Manager is not available, when work is completed. Hot Work Permits are valid for one day only.

Contractors and subcontractors shall ensure that appropriate fire extinguisher(s) are available at the specific work site for use in case of a fire. All Contractor's employees

shall be properly trained to use them. While conducting Hot Work, a minimum of a 2A-20-BC fire extinguisher shall be within 30' of the work location.

In the event of a fire, the contractor or subcontractor shall immediately notify the nearest District employee and if possible, call emergency (911) and give the location of the plant, which is 300 Smith Ranch Rd. San Rafael. A map of the wastewater plant is included in this policy (Attachment A).

The following fire prevention rules and requirements shall be followed:

a. Open flames or fires are prohibited at all times except under the Hot Work Permit System.
b. Any job or task that creates sparks, flames or heat sources enough to start a fire must be coordinated with the Las Gallinas Valley Sanitary District Facility Management and follow the Las Gallinas Valley Sanitary District Hot Work Program to determine if a Hot Work permit and fire watch is warranted.
c. Follow the Las Gallinas Valley Sanitary District fire prevention program throughout all phases of work to assure that effective firefighting equipment is immediately available and designed to effectively meet all anticipated fire hazards.
d. Store materials so they do not obstruct exits. Materials shall be stored with due regard to their fire characteristics; oxygen and acetylene cylinders shall never be stored at an exit or in emergency egress routes and must be stored at least 20' apart. Clearance of at least 36 inches shall be maintained for lights, heating units and electrical boxes.
e. When practical, objects to be welded, cut or heated should be moved to a designated safe location. If the object cannot be moved, positive means shall be taken to confine the heat, sparks and slag and protect adjacent combustible materials.
f. All extinguishers must be prominently placed, labeled for use and kept clear of obstructions at all times.
g. If a fire extinguisher is used or is found discharged, report it to the supervisor immediately so it can be serviced. A replacement extinguisher should be mounted immediately.
h. Fire extinguishers shall be inspected on a monthly basis. The date and inspector's initials on the tag document the inspection.
i. When the fire signal (alarm) sounds, exit the building/facility and gather at the designated assembly point. Do not try to take tools or personal belongings with you, exit immediately.
j. No smoking will be strictly enforced in all areas where "No Smoking" signs are posted,
k. Personal appliances including hot plates and space heaters are prohibited.

Flammable and Combustible Liquids

Flammable and combustible liquids shall be stored, transferred and used in accordance with the following requirements below:

a. Only approved containers will be used for the storage and handling of flammable and combustible liquids. Flammables, including gasoline, will be stored in approved safety cans. Containers shall be closed tightly at all times, except when transferring product.

b. Under no circumstances will gasoline or other high flash-point flammables be utilized as a cleaning solvent.

c. When not in use and at the end of the workday, all flammable liquid containers will be placed in the flammable liquid storage cabinets.

d. Flammable or combustible liquids that have leaked or spilled shall be cleaned up immediately and disposed of per the supervisor's instructions.

e. There shall be no smoking, open flame or use of flammable or combustible liquids in the area of storage. All employees must observe company restrictions on where and when smoking is acceptable.

f. Isolate all combustible and flammable materials and solvents from possible ignition sources such as open flames, heated surfaces, electric arcs and sparks, mechanical sparks, static electricity, and self-heating materials. In short, all energy sources (mechanical, electrical, chemical, thermal, radiation) should be considered as potential ignition sources.

Hazard Communication-GHS

Any contractor or subcontractor whose employees will be bringing onto Las Gallinas Valley Sanitary District Facility grounds any hazardous chemicals, products or materials shall have a written Hazard Communication Program in compliance with Title 8 CCR Section 5194. The contractor or subcontractor shall provide to the Las Gallinas Valley Sanitary District the following:

a. An inventory of hazardous products, chemicals and materials to be used.

b. Safety Data Sheets for items mentioned above.

c. A copy of the employer’s written Hazard Communication Program.

Any contractor or subcontractor whose employees will be bringing onto Las Gallinas Valley Sanitary District Facility grounds any hazardous chemicals, products or materials shall ensure the following:

a. All hazardous chemicals, products and materials are stored properly and are visibly and legibly labeled and in proper storage containers and cabinets.

b. All exposed employees are trained in the employer’s Hazard Communication Program

c. All employees have access to Safety Data Sheets.
d. Hazardous work areas are signed and barricaded with ample HAZCOM signage.

The Las Gallinas Valley Sanitary District Facility Management will provide the following to any contractor or subcontractor whose employees will be working in Las Gallinas Valley Sanitary District Facility grounds and are exposed to hazardous substances:

a. A list of the hazardous chemicals, products and materials that exist on the premises.
b. Access to Safety Data Sheets for items mentioned above.
c. Orientation to the location of facility eye wash and drenching shower facilities.

Electrical Safety

Electrical hazards shall be identified and controlled prior to conducting any work activities that expose employees to such hazards. The following safe work practices and policies shall be followed:

a. Treat all electrical circuits and equipment as energized until zero energy state has been verified.
b. Do not attempt to adjust or repair any electrical device unless it is part of your regular job assignment. Bring observed hazards and maintenance needs to the attention of your supervisor as soon as possible.
c. Follow all Las Gallinas Valley Sanitary District lockout/tagout procedures when repairs, maintenance or servicing activities are necessary. Be sure to keep machines and powered equipment in a “zero energy state” when performing service or setup.
d. Keep covers to all electrical fixtures and wiring in place at all times, unless temporarily removed for servicing by qualified persons. We consider only Electricians to be qualified persons for electrical exposures.
e. Only qualified persons may reset breakers in an open panel box or enter an electric room with open panels.
f. Do not attach flexible cords to a wall, ceiling, door or other building surface.
g. Extension cords must be a three-wire flexible cord. The grounding (third) prong must be present.
h. Do not use metal ladders when electrical hazards are present. Use a fiberglass ladder.
i. Stationary and portable electric power tools shall be double-insulated or electrically grounded via a third wire. A double-insulated tool will be identified on the tool’s label

j. Ground fault circuit interrupters (GFCI) will be used on all job sites. A breaker or outlet type GFCI will be used for all new work. If a portable GFCI is used, it will be plugged directly into an outlet that is part of the permanent wiring. Never use an extension cord between the permanent wiring and the portable GFCI

k. All temporary illumination systems shall be elevated above the working surface and all bulbs protected.

l. Never use electrical equipment in wet or damp areas unless the equipment is approved for use in these areas and suitable PPE is utilized,

Working at Elevated Locations and Fall Protection

Fall hazards are common in the construction industry and a leading cause of injuries and fatalities. The hierarchy of controls indicates that fall hazard elimination is the highest priority. Subsequently, passive fall protective systems (guardrails) shall be used to prevent falls. If this is not feasible, a fall restrain system shall be utilized. Fall arrest systems may be used at elevated work locations greater than 18' above the lower level. If fall arrest systems are in use, the contractor or subcontractor shall submit to the District representative a written comprehensive rescue plan.

It is the policy of the Las Gallinas Valley Sanitary District to maintain 100% fall protection at all times. The following basic fall protection requirements shall be followed and enforced:

a. Fall protection is required when work is conducted from elevating work platforms including scissor lifts, boom lifts, bucket trucks and any time employees are elevated in a personnel cage by crane or forklift.

b. A competent person shall calculate total fall distance and ensure that the fall protection system used will adequately protect the user.

c. Do not remove guardrails or perimeter cables without authorization from your supervisor. Once guardrails or cables are removed, fall protection is required.

d. Fall arrest or restraint equipment is required whenever you could fall more than 4 feet (General Industry) or 7.5' (Construction Industry) and there are no guard rails or other forms of fall prevention in place. Training on how to inspect, wear and attach fall arrest equipment must be completed before you are expected to use it,

e. Discuss proper anchorage points to be used with your supervisor or qualified person before starting the task.

f. Employees working below elevating work platforms, scaffolds or similar shall be protected from being struck by falling object by using toe-boards, tool lanyards, canopies, nets or other suitable protective measures.

g. Proper housekeeping practices shall be implemented at all times to prevent slip, trip and fall hazards.

h. Uncontrolled fall hazards shall be reported immediately and access to the fall hazard controlled until the hazard is eliminated.

Confined Space Entry

No employee shall enter the areas defined below until a competent person evaluates the area and authorizes entry. All confined space entry work shall be coordinated with the Las Gallinas Valley Sanitary District Facility Management in advance of the entry. All confined space entry work shall comply the Las Gallinas Valley Sanitary District written Confined Space Entry Procedures.

A confined space is:

1. Must be **large enough and configured** such that an employee can bodily enter and perform work.
2. A space that is **not designed for continuous** employee occupancy.
3. Has **limited** or **restricted** means for entry or exit.
4. Any space that may expose employees to the risk of death, incapacitation or impairment of ability to self-rescue is considered to be a Permit Required Confined Space. This includes potential **hazardous atmospheres** such as:
   a. Oxygen concentration below 19.5% or above 23.5%
   b. Flammable gas
   c. A toxic atmosphere or substance
   d. Airborne combustible dust limiting visibility to 5’ or less.
   e. Any other known and recognized serious health or safety concern.

General Confined Space Entry Procedure

Confined spaces of all types exist throughout the District and throughout the Wastewater Treatment Plant and range from open trenches and manholes, to tanks, clarifiers and digesters. Contractors are required to meet Cal/OSHA safety standards for PERMIT REQUIRED CONFINED SPACE ENTRY OPERATIONS, Title 8 Article 108 Sections 5156-5158. and to provide a safe working environment for their employees.

All Contractors directing or working in confined spaces are required to notify the Authorized District Representative prior to starting the entry operation. The District shall provide to the contractor of subcontractor a copy of the confined space assessment for the space to be entered and meet and confer with the contractor and subcontractor to discuss the known and recognized hazards of the space and entry procedures.

Contractors are responsible for all operations, testing, equipment calibration, ventilation, and entry per the Cal/OSHA standards. Contractors are responsible for all confined

space permits and all appropriate entry procedures. A copy of completed confined space permits are to be turned in to the District's safety manager upon termination.

The following confined space entry procedures and rules shall be followed:

a. An authorized person shall examine, test and evaluate the space before entry to determine that the appropriate precautions and PPE are available and will be used.
b. There shall be no unauthorized entry into a confined space by any person.
c. Top entries greater than 5' above the next level shall require fall protection.
d. Once a top portal cover has been removed, the opening shall be guarded by a temporary guardrail system or other effective means to prevent employees from falling into the space.
e. A rescue plan shall be developed and known by everyone involved in the entry.
f. An attendant knowledgeable about the rescue plan shall be stationed outside the space. They will have a means of alerting first responders should the rescue plan be initiated.
g. The attendant will **never** enter the confined space.
h. Atmospheric testing and continuous monitoring shall be used to verify that conditions do not deteriorate beyond the capabilities of the control methods being used (ventilation or respiratory protection).
i. Combustible compressed gas cylinders are not allowed in the confined space. Remove the torch from the space during breaks and at the end of the day. Changing torch heads or tips shall only be done outside the confined space.
j. A 2-A:20-BC portable dry chemical fire extinguisher shall be available whenever hot work is being done in a confined space. Carbon monoxide extinguishers are not allowed.
k. Retrieval equipment shall be worn by all entrants so that rescue can be initiated without anyone having to enter the space.
l. The Las Gallinas Valley Sanitary District Confined Space Program Administrator will coordinate entry to all confined spaces and notification of San Rafael Fire Department prior to and after the entry is completed.
m. The permit shall be closed out at the end of the workday by physically observing the space, ensuring that work is complete, and all employees have left the space.
n. If work is necessary for more than one day, a new confined space permit must be completed and submitted.

Respiratory Protection Program

Administration

Responsibility and authority for administration of a respiratory protection program is assigned to the employers Respiratory Protection Program Administrator. It is his/her responsibility to assure full compliance with all sections of this program and be in compliance with all requirements outlined in Cal/OSHA Title 8 CCR 5144 and related appendices.

Hazard Assessment

Proper assessment of the specific respiratory hazard is the first important step to determine what level of protection is required. Identification of the airborne contaminant in question, its physical state and concentration is required to determine proper protective measures.

Hazard Control

Hazard elimination shall be the primary goal. Wet methods, integrated dust collection systems, substitution, local and general exhaust systems and employee rotation are possible controls. When employees are anticipated to be exposed to harmful airborne contaminants beyond Permissible Exposure Limits (PEL), an appropriate NIOSH-approved respirator with proper filtration media shall be selected and used. The contractor or subcontractor is required to perform a job hazard analysis to identify hazards and engineering and administrative hazard controls. If the airborne contaminant hazard is not reduced to an acceptable level, respiratory protection must be used.

Respirator Selection

NIOSH-approved respirators will be selected based on the hazard assessment performed. Employees are prohibited from bringing their own respirators onto the worksite. Voluntary use of N95 filtering face-piece respirators (dust masks) for protection against dusts/mists, even though exposures are found to be below applicable exposure limits, is allowed as long as the employee has a medical evaluation, is trained and has read Appendix D of Title 8CCR 5144 and is aware of its limitations.

Medical Evaluation and Surveillance

Employees required to wear a respirator, including NIOSH approved N-95 filtering face piece, must be cleared by a Professional Licensed Health Care Provider (PLHCP) before being issued the equipment. Additional periodic evaluations, if deemed necessary due to respirator type, frequency of use or employee health, will be determined by physician's recommendation. Any employee that uses a respirator 30 or more days in a year for protection from airborne contaminants shall be enrolled in a Medical Surveillance Program.

Respirator Fit Testing

A qualitative or quantitative fit test will be performed annually on employees who wear negative-pressure respirators. This testing process will also allow the employee to become accustomed to the respirator prior to entering a hazardous atmosphere. Employees that are required to wear a NIOSH approved N-95 filtering face piece are

required to be fit tested. Fit testing shall be in compliance with Title 8CCR Section 5144 Appendix A.

Respirator Training

Each employee that uses a respirator will receive annual training that covers the following information:

a. The hazardous nature of the air contaminant.

b. Other hazard controls in effect and the reasons respirators are needed.

c. The function, limitations, and capabilities of the respirator.

d. The requirement that respirator users shall have no facial hair that interrupts the seal of the facepiece to the face or interrupts the function of valves.

e. For filter type respirators, how to determine when the filter element needs to be changed.

f. The potential consequences of overexposure caused by improper respirator use.

g. How to check proper respirator fit before entering the area of exposure and why it is important to eliminate factors that can interfere with proper fit (beards, long sideburns, etc.).

h. How and why to perform positive and negative pressure tests each time the respirator is donned.

i. Procedures for proper cleaning, maintenance, and storage of the respirator.

Respirator Maintenance

Any employee using a respirator will clean and disinfect it at the end of each day it is used. During cleaning, inspect all parts for fit and deterioration. If deficiencies are found, the parts will be replaced, or a replacement respirator will be obtained. Respirators will be assigned to individual employees as required and will not be shared with anyone else.

Respirator Storage

The employee shall store the respirator in a clean, plastic, re-sealable bag or container after it has been cleaned and disinfected. The respirator will be stored in a temperate location 40 to 90 degrees F and not subjected to freezing conditions. It must be protected from physical damage or creasing from being struck or crushed by other tools or equipment. Chemical filters shall be stored separately from the face piece.

Respiratory Protection Program Review and Revision

This program will be evaluated annually for effectiveness annually. Incident records, including first aid logs, fit test records and training records will be reviewed to identify any illness or injury associated with respiratory protection. A representative sample of

supervisors and employees who have used respirators will be surveyed for their view on the program.

Trenching, Excavation and Shoring

All trenching, excavation and shoring activities shall be conducted under the direct supervision of a competent person and in accordance with Cal/OSHA Title 8 CCR Sections 1539-1541.1 and California Government Code 4216. The following requirements shall be followed:

a. Prior to penetrating the surface, all utilities shall be marked by a qualified utility marking entity and in compliance with California Government Code 4216. Except in an emergency, digging shall not commence until utilities have been marked.

b. All digging activities shall be conducted in a manner that reduces the chance of damaging subsurface utilities. The competent person shall identify the exact location of subsurface utilities throughout the dig and enforce the use of non-powered digging methods until the exact location has been established.

c. Contractors and subcontractors shall report all damage to subsurface utilities, regardless if the excavator discovered or caused the damage.

d. Prior to digging, a competent person shall conduct an inspection of the proposed dig site. This inspection shall include a survey of the surrounding area and a soil analysis consisting of at least one visual inspection and one manual analysis of soil samples.

e. All trenches or excavations 5’ or greater in depth shall be protected from cave in by shoring, shielding, benching, or sloping. Trenches or excavations less than 5’ in depth shall be protected from cave-in using the methods mentioned above if there are signs of collapse.

f. Trenches or excavations 20’ or greater in depth shall have any protective system utilized designed under the supervision of a Professional Engineer registered in the State of California.

g. The assigned competent person shall determine the protective system to be used when employees enter the excavation or trench.

h. The excavator shall maintain on site any and all tabulated data used to make decisions for protecting employees entering the excavation or trench.

i. The competent person shall conduct an inspection daily, prior to employees entering the excavation or trench to identify and remove hazards. Subsequent inspections shall be conducted after any hazard increasing occurrence such as a rainstorm.

j. Access and egress shall be provided and positioned in trenches or excavations 4’ or greater in depth and such that an employee shall not have to travel greater than 25’ to access the route of access and egress. When ladders are used, the top of the ladder shall extend a minimum of 3’ above the landing.

k. Spoils piles and all other materials, equipment or supplies shall be staged no less than 2’ from any trench or excavation wall.

l. The competent person shall determine if there is potential for the development of a hazardous atmosphere in all trenches or excavations 4’ or greater in depth.

m. The competent person assigned to the excavation is responsible for all equipment required to dig safely and respond to anticipated emergencies.

Heat Illness Prevention

In California, employers must take steps to protect outdoor workers from heat illness with water, rest, shade and training. Heat illness prevention training is required for all outdoor workers and a written prevention plan must be available at all outdoor worksites. When outdoor temperatures are anticipated to reach the action level of 80 degrees Fahrenheit, contractors and subcontractors with exposed employees shall ensure the following:

a. All exposed employees have access to and have been trained on the employers Heat Illness Prevention Program.

b. Access to adequate supplies of suitably cool potable water.

c. Access to shade. Shade is considered to be complete blockage of the sun.

d. Cool down rest breaks are granted when requested by affected employees.

Temporary Traffic Controls

Contractors and subcontractors conducting temporary traffic controls shall do so in compliance with Cal/OSHA Title 8 CCR 1598-1599 and the California Manual on Uniform Traffic Control Devices (MUTCD). In some cases, an approved written Traffic Control Plan may be required. The following requirements shall be followed:

a. All temporary traffic controls shall be planned by a qualified person and in advance to expedite gaining control of traffic and ensuring the required number and type of traffic control devices are present.

b. All temporary traffic control devices shall be of the approved type as stipulated by the California Department of Transportation. All devices shall be of the Appropriate dimensions and retro-reflectivity based on the speed of the work zone and hours of darkness.

c. All temporary traffic control zones shall include the following component zones:

- Advanced Warning Zone
- Transition Zone
- Activity Area with Buffer Zone
- Termination Zone

d. All temporary traffic control devices shall be maintained in usable condition and inspected periodically including but not limited to, signs, warnings, strobe lights, barricades, cones, and delineators.
e. Personnel acting as flaggers shall be equipped with a STOP/SLOW paddle and dawn at minimum Class 3 retro-reflective high visibility apparel.
f. A minimum of two flaggers shall be utilized for any lane closure. In this case, a lead flagger shall be identified.
g. Any accident or emergency in the temporary traffic control zone shall be reported to 911 and District Management immediately.

General Safety Expectations

The following general safety performance expectations shall apply to all contractor and subcontractors work groups:

a. Perform only those jobs to which you have been assigned and properly instructed. If you have any doubts or questions, ask your supervisor.
b. Report damaged equipment immediately for replacement or repair.
c. First aid will be administered only by trained authorized first responders.
d. If any part of your body comes in contact with an acid or caustic substance, rush to the nearest water available and flush the affected part. Secure medical aid immediately.
e. Keep your mind on your work at all times. Horseplay is not permitted on the job.
f. Do not distract the attention of fellow workers. Do not engage in any act that would endanger another employee.
g. Watch where you are walking. Do not run or take short cuts. Use only designated access routes to work areas.
h. The use of illegal drugs or alcohol or being under the influence of the same on the project is cause for termination. Inform your supervisor if you are taking strong prescription drugs that warn against driving or using machinery.
i. The employer provides sanitation facilities for your use. Damaging or defacing these facilities is forbidden.
j. Serious injury can result when compressed air is used for personal cleaning or cooling. Use compressed air for equipment operation only.
k. Keep all fire protection equipment and exits clear of obstructions to allow ready access.
l. Riding on any material handling equipment not equipped with a seat and seat belt for each rider is prohibited and will be grounds for disciplinary action. Do not enter

any barricaded area unless you are authorized to do so and are wearing the proper required PPE.

m. Never throw anything "overboard." Someone passing below may be seriously injured.

Hand and Portable Powered Tools

Each contractor or subcontractor shall be responsible for the safe condition of tools and equipment used by employees, including tools and equipment which may be furnished by employees. All tools shall be restricted to the use for which they are intended. Unsafe hand tools shall not be used. The following rules apply to the use of hand and portable powered tools:

a. Keep tools clean, free of grease and dirt. Clean tools work better and last longer. Poorly maintained tools are less efficient and may cause damage or injuries.

b. Red tag defective tools for repair.

c. Do not use power tools and equipment until you have been properly instructed in the safe work methods and are given authority to use them.

d. Do read and understand the manufacturer's recommendations for safe use of the tool including the recommendations for PPE.

Safe Use of Portable Ladders

The following specific requirements apply to portable ladder safety. Use of portable ladders shall comply with Cal/OSHA Title 8 CCR Section 3276:

a. Training in the safe use of portable ladders is required for all contractor and subcontractor employees that use them.

b. For any overhead work near electrical sources, use an appropriate ladder for the task (fiberglass). Metal ladders must not be used when working on or near electrical circuits.

c. Maintain a minimum of 10' clearance distance from any energized systems or equipment.

d. Straight or extension ladders should have non-skid feet or be cleated. Secure ladders by lashing at the top and blocking at the bottom if there is chance of slippage.

e. Set up straight or extension ladders at 75.5 degrees using the label on the side rail or measuring one foot out for every four feet of length (the 4:1 rule). Only use ladders on a firm, level, and stable base, not on lumber, masonry block or other insecure materials. Never set up a ladder on a scaffold or other elevated work platform.

f. Never climb on the two highest rungs of a step, straight or extension ladder, or sit or stand on the top cap of an "A" frame ladder.

g. When straight ladders are used to access a work platform, the top must extend at least 3 feet above the landing, deck or roof area.

h. Remove defective ladders from service and tag "*Dangerous, Do Not Use*.",

i. Inspect the ladder for defects (missing cleats, cracked rungs, broken spreaders, etc.) before use. Do not use a defective ladder. Position ladders away from doors unless door is blocked, locked or guarded to prevent it from striking the ladder.

j. Stepladders will be used only when fully open with both spreader bars locked and on firm and level surface. Do not use a stepladder in the closed or semi-closed position or as a lean-to ladder.

k. Climb the front steps (not rear braces) of a stepladder. Always face the ladder when climbing or working.

l. Maintain three points of contact at all times when ascending or descending the ladder.

m. Never walk an "A" frame ladder or jump a straight ladder.

Housekeeping

During the course of construction, alteration, or repairs, form and scrap lumber with protruding nails and all other debris shall be kept reasonably cleared from work areas, passageways, and stairs in and around buildings or other structures. The following housekeeping rules shall apply at all times:

a. Dispose of oily rags, old paint cans and other containers that have held flammable liquids in the appropriate labeled receptacle.

b. Throw debris and scrap in properly labeled waste containers. Do not place combustibles or flammables in open containers.

c. Identify slip, trip and fall hazards in the work area and control them.

d. Practice good housekeeping around your work area. Everyone must look after their own area and report other areas in need of attention to the supervisor promptly.

9.0 SAFETY COMMUNICATIONS

At minimum Cal/OSHA requires all employers to provide a system of communication regarding safety issues, concerns and identified hazards. Employees that bring these concerns to their employer shall do so without fear of reprisal. In a multiemployer work environment, the host employer and the contractor or subcontractor commit to a program that will provide the same level of safety and health protection to temporary and contract workers as to permanent workers. Before the start of any on-site work, the host employer and contractor or subcontractor, establish their respective safety and health responsibilities and obligations, as well as procedures for coordinating these

responsibilities and communicating safety and health information, employee training and education.

The key elements of safety communication include:

- Management leadership
- Worker participation
- Hazard identification and assessment
- Hazard prevention and control
- Employee training and education
- Program evaluation

10.0 INJURY AND ILLNESS REPORTING

It is the policy of the Las Gallinas Valley Sanitary District that all employees report any and all occupational related injury or illness to their supervisors immediately. Supervisors shall document and investigate all reported injuries and illnesses and provide guidance to the employee in seeking medical attention beyond basic first aid.

Employers shall report immediately by telephone to the nearest District Office of the Division of Occupational Safety and Health any serious injury or illness, or death, of an employee occurring in a place of employment or in connection with any employment. If a contractor is injured, the contractor's employer must notify Cal/OSHA.

Immediately means as soon as practically possible, but not longer than 8 hours after a manager or higher knows or with diligent inquiry would have known of the death or serious injury or illness.

A serious injury is defined as: any injury or illness occurring in a place of employment or in connection with any employment that requires inpatient hospitalization for other than medical observation or diagnostic testing, or in which an employee suffers an amputation, the loss of an eye, or any serious degree of permanent disfigurement, but does not include any injury or illness or death caused by an accident on a public street or highway, unless the accident occurred in a construction zone.

11.0 PERIODIC INSPECTIONS

Periodic inspections are designed to ensure that the Code of Safe Practices is being followed and to help identify new or previously unrecognized hazards. Inspection reports will be provided to the Las Gallinas Valley Sanitary District Facility Management for the inspected area(s). All safety violations, hazards and safety concerns observed will be documented. Use of an inspection check list aids in recordkeeping.

Supervisors will conduct a morning safety walk through of their employee primary area(s) and equipment to ensure it is in safe condition. Each morning, supervisors will review with their work crews any hazards associated with work to be performed that day.

Supervisors will document periodic safety inspections of their area and may include items on the below list. In some cases, the inspection shall be conducted by a competent person or qualified person. The following inspections shall be performed:

Required Inspection Frequency	
Fire Extinguisher	*Monthly*
Eye Wash Station	*Monthly*
Emergency Shower	*Monthly*
Forklift/Scissor Lift/Aerial Lift	*Pre-shift or pre use*
Hazardous Waste Containers	*Weekly*
Respirator	*Pre use*
Fall Protection Equipment	*Semi-annually & pre use*
Confined Space Equipment	*Per Equipment Manufacturer*
Portable Ladders	*Pre use*
Scaffold System	*Daily Prior to Employee Access*
Trench/Excavation	*Daily Prior to Employee Access. After Any Hazard Increasing Occurrence*
Work Areas	*Daily before work begins*

Managers and Supervisors shall conduct inspections as often as possible and at intervals sufficient to ensure safe and sanitary working conditions are maintained at all times.

12.0 HAZARD IDENTIFICATION AND CORRECTION

Hazard identification and assessment means that all contractors or subcontractors shall:

a. Collect and review information about the hazards likely to be present in the workplace.

b. Periodically inspect the workplace to identify new or recurring hazards.

c. Investigate injuries, illnesses, incidents, and close calls/near misses to identify the underlying hazards.

d. Identify and address any trends in injuries, illnesses, and hazard reports. Consider hazards associated with emergency or non-routine situations.

e. Determine the severity and likelihood of incidents that could result from each hazard identified and use this information to prioritize corrective actions.

Note: employers have an ongoing obligation to control serious, recognized hazards.

13.0 RECORDKEEPING REQUIREMENTS

Record	Minimum Retention (yrs)	Code citation
Workplace inspections	1	8CCR3203(b)(1)

Training records (See below for exceptions)	1	8CCR3203(b)(2)
Safety committee meeting records	1	8CCR3203(c)(2)
Accident investigation records	None	
OSHA300, 300A, 301	5	8CCR14300.33
Employee medical records	Termination of employment + 30 yrs	8CCR3204(d)(1)(A)
Employee exposure records (Includes all workplace monitoring data, MSDSs, Chemical inventories)	"At least" 30 yrs	8CCR3204(d)(1)(B)
Bloodborne Pathogens Training	3	8CCR5193(h)(2)(B)
Sharps injury log	5	8CCR5193(h)(3)
Hazwaste manifest receipts	3	HSC25160.2(b)(3)&(4)
Asbestos training records	Termination of employment + 1 year	8CCR1529(n)(4)
Notification of identification, location and quantity of asbestos	Duration of ownership of building; must be transferred to new owner	8CCR1529(n)(6)
Noise exposure measurements	2	8CCR5100(d)(1)
Audiometric test records	Duration of employment	8CCR5100(d)(2)
Maintenance of fire extinguishing systems	5	19CCR904.1(b)
MSDS & SDS, and employee hazardous material exposure records	30 years	8,CCR 5194
Reports of testing on mechanical ventilation systems such as fume hoods	5 yrs	8 CCR 5143
Reports of testing on HVAC systems for building ventilation	5 yrs	8 CCR 5142(b)(2)

14.0 PERIODIC PROGRAM EVALUATION

Program evaluation and improvement means that the Las Gallinas Valley Sanitary District Facility Management will:

a. Establish, report, and track metrics that indicate whether the program is effective.

b. Evaluate the overall program, initially and periodically, to identify deficiencies and opportunities for improvement.

c. Monitor progress and performance of contractors or subcontractors.

d. Verify that the program is implemented and is operating.

e. Correct program deficiencies and identify opportunities to improve.

Appendix A- Wastewater Treatment Plant Map

©2024 Du-All Safety, LLC.

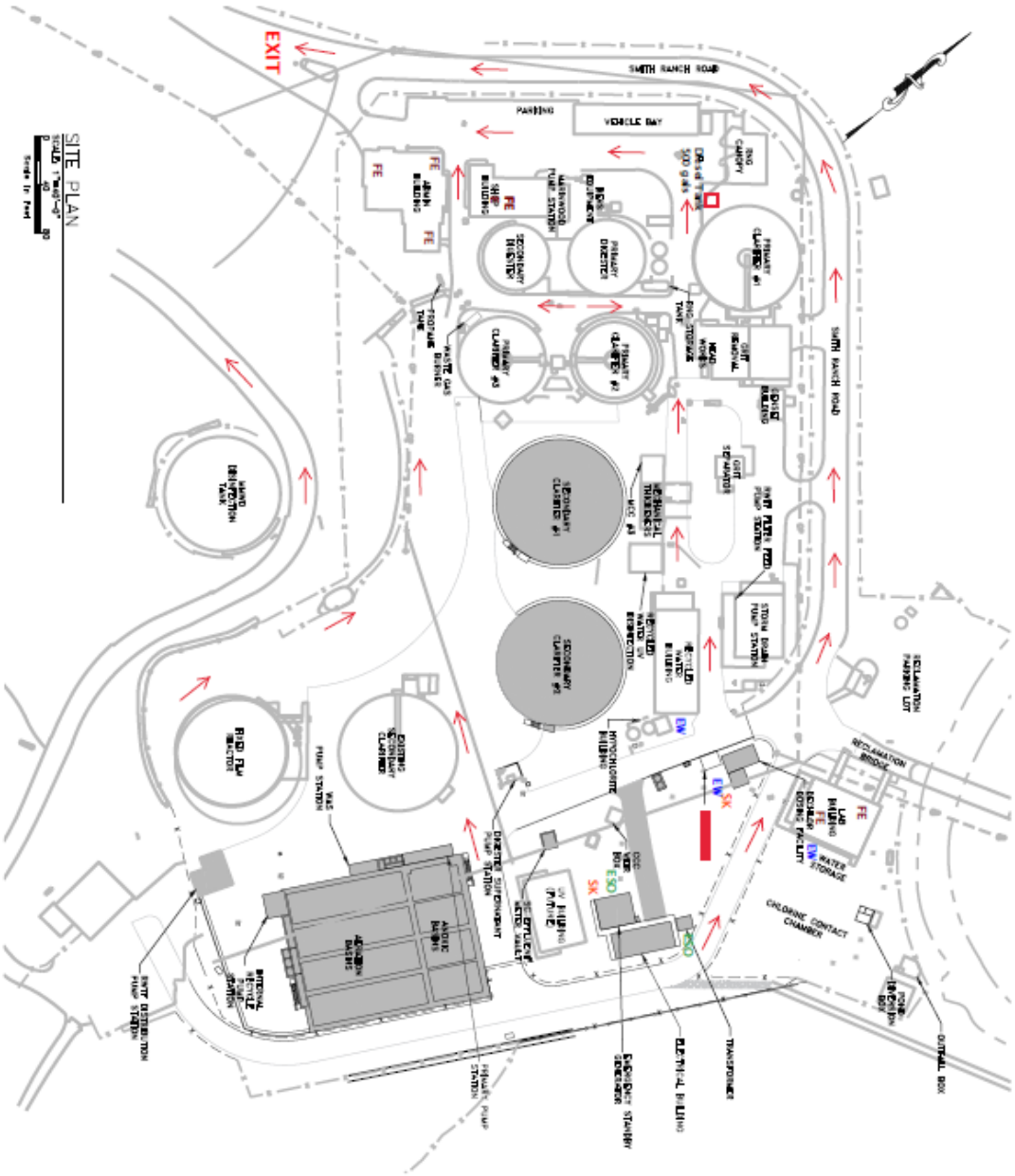
SITE PLAN
EXIT
SMITH RANCH ROAD
VEHICLE BAY
PARKING
PRIMARY CLARIFIER #1
PRIMARY CLARIFIER #2
PRIMARY CLARIFIER #3
PRIMARY DIGESTER
SECONDARY DIGESTER
SECONDARY CLARIFIER #1
SECONDARY CLARIFIER #2
SECONDARY CLARIFIER #3
EXISTING SECONDARY CLARIFIER
FIELD FILM REACTOR
WAS STATION
ANOXIC BASINS
AEROBIC BASINS
DIGESTER SUPERNATANT PUMP STATION
PRIMARY PUMP STATION
SECONDARY STANDBY GENERATOR
ELECTRICAL BUILDING
TRANSFORMER
OUTFALL BOX
CHLORINE CONTACT CHAMBER
WATER STORAGE
RECLAMATION PARKING LOT
RECLAMATION BRIDGE
STORM PUMP STATION
RECYCLED WATER BUILDING
RECYCLED WATER UV DISINFECTION
HYPOCHLORITE BUILDING
UV BUILDING
EQ BASIN
DISTRIBUTION PUMP STATION
MAIN DISINFECTION TANK
FIRE PUMP BUILDING
SHOP BUILDING
WASHWOOD PUMP STATION
ENG. STORAGE TANK
GRIT REMOVAL
GRIT SEPARATOR
DRY CANOPY
Legend
EW = Eyewash/Shower Station
SK = Spill Kit
FE = Fire Extinguisher
ESO = Emergency Shutoff

Appendix B- Definitions

©2024 Du-All Safety, LLC.

Appendix B- Definitions

PARTS AND MATERIALS:

All products, materials, devices, systems, or installations installed by Contractor shall have been approved, listed, labeled, or certified as conforming to applicable governmental or other nationally recognized standards, or applicable scientific principles. The listing, labeling, or certification of conformity shall be based upon an evaluation performed by a person, firm, or entity with appropriate registered engineering competence; or by a person, firm, or entity, independent of the manufacturer or supplier of the product, with demonstrated competence in the field of such evaluation.

CONTRACTOR:

Designates “Contractor”, “Contractors”, “Sub-Contractors”, “Suppliers”, and all employees of each.

AUTHORIZED DISTRICT REPRESENTATIVE:

The District’s Authorized Representatives shall be the employee(s) designated by the District to be responsible for communicating with the Contractor or subcontractor.

COMPETENT PERSON:

One who is capable of identifying existing and predictable hazards in the surroundings or working conditions which are unsanitary, hazardous, or dangerous to employees, and who has authorization to take prompt corrective measures to eliminate them.

QUALIFIED PERSON:

Qualified Person, Attendant or Operator. A person designated by the employer who by reason of training, experience or instruction has demonstrated the ability to safely perform all assigned duties and, when required, is properly licensed in accordance with federal, state, or local laws and regulations.

DISTRICT JURISDICTION:

For the purposes of these regulations, “District” Shall mean the Las Gallinas Valley Sanitary District.

TREATMENT PLANT AND FACILITIES:

For the purposes of these regulations, “Treatment Plant & Facilities” shall include the District's Wastewater Treatment Plant, lift stations and sewage conveyance systems located within the boundaries of the District.

©2024 Du-All Safety, LLC.

APPENDIX B

INSURANCE FORMS

THIS PAGE LEFT INTENTIONALLY BLANK

APPENDIX B:
Common Insurance Industry Forms

- ACORD Certificates of Insurance:
  - Standard form
  - Annotated form
- Primary and Non-Contributory Endorsement
- ISO standard endorsements
  - CG 20 10, CG 20 33, CG 20 37, CG 20 38, CG 20 26, CG 20 39 and CG 20 40
- ISO endorsement: State or Political Subdivisions
- ISO endorsement: Waiver of Subrogation
- Four ISO endorsements used to amend policy limits:
  - Amendment of Limits of Insurance (Designated Project or Premises)
  - Amendment of Limits of Insurance
  - Amendment – Aggregate Limits of Insurance (Per Project)
  - Amendment – Aggregate Limits of Insurance (Per Location)
- Four State Compensation Insurance Fund Forms:
  - Certificate of Workers' Compensation Insurance
  - Additional Insured Employer
  - Waiver of Subrogation
  - Certificate Holders' Notice (Cancellation Notice)
- ISO policy for General Liability on an "Occurrence" basis
- Form MCS-90 – Endorsement for Motor Carrier Policies of Insurance for Public Liability
- Performance Bond
- Payment Bond Public Works

Certificate of Liability Insurance (Standard Form)

ACORD

CERTIFICATE OF LIABILITY INSURANCE

DATE (MM/DD/YYYY)

THIS CERTIFICATE IS ISSUED AS A MATTER OF INFORMATION ONLY AND CONFERS NO RIGHTS UPON THE CERTIFICATE HOLDER. THIS CERTIFICATE DOES NOT AFFIRMATIVELY OR NEGATIVELY AMEND, EXTEND OR ALTER THE COVERAGE AFFORDED BY THE POLICIES BELOW. THIS CERTIFICATE OF INSURANCE DOES NOT CONSTITUTE A CONTRACT BETWEEN THE ISSUING INSURER(S), AUTHORIZED REPRESENTATIVE OR PRODUCER, AND THE CERTIFICATE HOLDER.

IMPORTANT: If the certificate holder is an ADDITIONAL INSURED, the policy(ies) must have ADDITIONAL INSURED provisions or be endorsed. If SUBROGATION IS WAIVED, subject to the terms and conditions of the policy, certain policies may require an endorsement. A statement on this certificate does not confer rights to the certificate holder in lieu of such endorsement(s).

PRODUCER	CONTACT NAME:	
	PHONE (A/C, No, Ext): / FAX (A/C, No):	
	E-MAIL ADDRESS:	
	INSURER(S) AFFORDING COVERAGE	NAIC #
	INSURER A :	
INSURED	INSURER B :	
	INSURER C :	
	INSURER D :	
	INSURER E :	
	INSURER F :	

COVERAGES CERTIFICATE NUMBER: REVISION NUMBER:

THIS IS TO CERTIFY THAT THE POLICIES OF INSURANCE LISTED BELOW HAVE BEEN ISSUED TO THE INSURED NAMED ABOVE FOR THE POLICY PERIOD INDICATED. NOTWITHSTANDING ANY REQUIREMENT, TERM OR CONDITION OF ANY CONTRACT OR OTHER DOCUMENT WITH RESPECT TO WHICH THIS CERTIFICATE MAY BE ISSUED OR MAY PERTAIN, THE INSURANCE AFFORDED BY THE POLICIES DESCRIBED HEREIN IS SUBJECT TO ALL THE TERMS, EXCLUSIONS AND CONDITIONS OF SUCH POLICIES. LIMITS SHOWN MAY HAVE BEEN REDUCED BY PAID CLAIMS.

INSR LTR	TYPE OF INSURANCE	ADDL INSD	SUBR WVD	POLICY NUMBER	POLICY EFF (MM/DD/YYYY)	POLICY EXP (MM/DD/YYYY)	LIMITS	
	COMMERCIAL GENERAL LIABILITY						EACH OCCURRENCE	$
	CLAIMS-MADE / OCCUR						DAMAGE TO RENTED PREMISES (Ea occurrence)	$
							MED EXP (Any one person)	$
							PERSONAL & ADV INJURY	$
	GEN'L AGGREGATE LIMIT APPLIES PER:						GENERAL AGGREGATE	$
	POLICY / PRO-JECT / LOC						PRODUCTS - COMP/OP AGG	$
	OTHER:							$
	AUTOMOBILE LIABILITY						COMBINED SINGLE LIMIT (Ea accident)	$
	ANY AUTO						BODILY INJURY (Per person)	$
	OWNED AUTOS ONLY / SCHEDULED AUTOS						BODILY INJURY (Per accident)	$
	HIRED AUTOS ONLY / NON-OWNED AUTOS ONLY						PROPERTY DAMAGE (Per accident)	$
								$
	UMBRELLA LIAB / OCCUR						EACH OCCURRENCE	$
	EXCESS LIAB / CLAIMS-MADE						AGGREGATE	$
	DED / RETENTION $							$
	WORKERS COMPENSATION AND EMPLOYERS' LIABILITY						PER STATUTE / OTH-ER	
	ANY PROPRIETOR/PARTNER/EXECUTIVE OFFICER/MEMBER EXCLUDED? (Mandatory in NH) Y / N / N / A						E.L. EACH ACCIDENT	$
	If yes, describe under DESCRIPTION OF OPERATIONS below						E.L. DISEASE - EA EMPLOYEE	$
							E.L. DISEASE - POLICY LIMIT	$

DESCRIPTION OF OPERATIONS / LOCATIONS / VEHICLES (ACORD 101, Additional Remarks Schedule, may be attached if more space is required)

CERTIFICATE HOLDER	CANCELLATION
	SHOULD ANY OF THE ABOVE DESCRIBED POLICIES BE CANCELLED BEFORE THE EXPIRATION DATE THEREOF, NOTICE WILL BE DELIVERED IN ACCORDANCE WITH THE POLICY PROVISIONS.
	AUTHORIZED REPRESENTATIVE

© 1988-2016 ACORD CORPORATION. All rights reserved.

ACORD 25 (2016/03) The ACORD name and logo are registered marks of ACORD

SAMPLE

Certificate of Liability Insurance (Annotated Form)

2 *This notice confirms the provisions of the California Insurance Code, §384. Other states have similar provisions. It states that the policy, not the certificate governs coverage.*

CERTIFICATE OF LIABILITY INSURANCE

DATE (MM/DD/YYYY)

ISSUED AS A MATTER OF INFORMATION ONLY AND CONFERS NO RIGHTS UPON THE CERTIFICATE HOLDER. THIS NOT AFFIRMATIVELY OR NEGATIVELY AMEND, EXTEND OR ALTER THE COVERAGE AFFORDED BY THE POLICIES FICATE OF INSURANCE DOES NOT CONSTITUTE A CONTRACT BETWEEN THE ISSUING INSURER(S), AUTHORIZED PRODUCER, AND THE CERTIFICATE HOLDER.

rtificate holder is an ADDITIONAL INSURED, the policy(ies) must have ADDITIONAL INSURED provisions or be endorsed. VAIVED, subject to the terms and conditions of the policy, certain policies may require an endorsement. A statement on t confer rights to the certificate holder in lieu of such endorsement(s).

1 *This block identifies the Agent or Broker.*

CONTACT NAME:
PHONE (A/C, No, Ext): FAX (A/C, No):
E-MAIL ADDRESS:

INSURER(S) AFFORDING COVERAGE	NAIC #
INSURER A :	
INSURER B :	
INSURER C :	
INSURER D :	
INSURER E :	
INSURER F :	

3 *The insurer will be identified here. The insurer letter appears again near the left margin at "*3" to show which insurer provides which coverage.*

INSURED

The insured is your entity's contractor or lessee.

4

COVERAGES CERTIF NUMBER:

THIS IS TO CERTIFY THAT THE POLICIES OF INSURANCE LISTED BELOW HAVE BEEN ISSUED TO THE INSURED NAMED ABOVE FOR THE POLICY PERIOD INDICATED. NOTWITHSTANDING ANY REQUIREMENT, TERM OR CONDITION OF ANY CONTRACT OR OTHER DOCUMENT WITH RESPECT TO WHICH THIS CERTIFICATE MAY BE ISSUED OR MAY PERTAIN, THE INSURANCE AFFORDED BY THE POLICIES DESCRIBED HEREIN IS SUBJECT TO ALL THE TERMS, EXCLUSIONS AND CONDITIONS OF SUCH POLICIES. LIMITS SHOWN MAY HAVE BEEN REDUCED BY PAID CLAIMS.

5 *This notice again states that the policy supersedes the certificate form.*

6 *The policy number should correspond to the policy affording the coverages of this row.*

INSR LTR	TYPE OF INSURANCE	POLICY NUMBER	POLICY EFF (MM/DD/YYYY)	POLICY EXP (MM/DD/YYYY)	
	COMMERCIAL GENERAL LIABILITY CLAIMS-MADE OCCUR				EACH OCCURRENCE $
					DAMAGE TO RENTED PREMISES (Ea occurrence) $
*3					MED EXP (Any one person) $
					PERSONAL & ADV INJURY $
	GEN'L AGGREGATE LIMIT APPLIES PER:				GENERAL AGGREGATE $
	POLICY PRO-JECT LOC				PRODUCTS - COMP/OP AGG $
	OTHER:				$
	AUTOMOBILE LIABILITY				COMBINED SINGLE LIMIT (Ea accident) $
	ANY AUTO				BODILY INJURY (Per person) $
	OWNED AUTOS ONLY / SCHEDULED AUTOS				BODILY INJURY (Per accident) $
	HIRED AUTOS ONLY / NON-OWNED AUTOS ONLY				$
	UMBRELLA LIAB / OCCUR				$
	EXCESS LIAB / CLAIMS-MADE				$
	DED / RETENTION $				$
	WORKERS COMPENSATION AND EMPLOYERS' LIABILITY ANY PROPRIETOR/PARTNER/EXECUTIVE OFFICER/MEMBER EXCLUDED? (Mandatory in NH) Y / N N / A If yes, describe under DESCRIPTION OF OPERATIONS below				OTH-ER $
					E.L. EACH ACCIDENT $
					E.L. DISEASE - EA EMPLOYEE $
					E.L. DISEASE - POLICY LIMIT $

7 *These sections show the type of coverage provided through the agent or broker identified in "1" above. If the insured uses more than one broker, this certificate will not identify all existing.*

8 *These two columns show inception and expiration dates for policies identified. Pay special attention that coverage does not expire before or during your project or lease.*

DESCRIPTION OF OPERATIONS / LOCATIONS / VEHICLES (ACORD 101, Additional Remarks Schedule, may be attached if

9 *This column identifies limits per occurrence and aggregate for each type of coverage afforded. Pay special attention to low aggregate limits for public works-type contractors. Losses on other jobs may reduce your coverage.*

10 *This section will usually be used to restrict coverage to a specific job or lease. Watch for restrictions that would omit the coverage required by your specifications.*

CANCELLATION

Cancellation provisions

12

SHOULD ANY OF THE ABOVE DESCRIBED POLICIES BE CANCELLED BEFORE THE EXPIRATION DATE THEREOF, NOTICE WILL BE DELIVERED IN ACCORDANCE WITH THE POLICY PROVISIONS.

11 *Certificate holder is your entity.*

AUTHORIZED REPRESENTATIVE

13 *The authorized representative of the insurer should be an employee, unless the agent or broker is specifically authorized to sign on behalf of the company.*

ACORD 25 (2016/03) The ACORD na All rights reserved.

Reproduction of Insurance Services Office, Inc. Form

COMMERCIAL GENERAL LIABILITY
CG 20 01 04 13

THIS ENDORSEMENT CHANGES THE POLICY. PLEASE READ IT CAREFULLY.

PRIMARY AND NONCONTRIBUTORY – OTHER INSURANCE CONDITION

This endorsement modifies insurance provided under the following:

COMMERCIAL GENERAL LIABILITY COVERAGE PART
PRODUCTS/COMPLETED OPERATIONS LIABILITY COVERAGE PART

The following is added to the **Other Insurance** Condition and supersedes any provision to the contrary:

Primary And Noncontributory Insurance

This insurance is primary to and will not seek contribution from any other insurance available to an additional insured under your policy provided that:

(1) The additional insured is a Named Insured under such other insurance; and

(2) You have agreed in writing in a contract or agreement that this insurance would be primary and would not seek contribution from any other insurance available to the additional insured.

SAMPLE

 © Insurance Services Office, Inc., 2012

Reproduction of Insurance Services Office, Inc. Form

POLICY NUMBER:

COMMERCIAL GENERAL LIABILITY
CG 20 10 04 13

THIS ENDORSEMENT CHANGES THE POLICY. PLEASE READ IT CAREFULLY.

ADDITIONAL INSURED – OWNERS, LESSEES OR CONTRACTORS – SCHEDULED PERSON OR ORGANIZATION

This endorsement modifies insurance provided under the following:

COMMERCIAL GENERAL LIABILITY COVERAGE PART

SCHEDULE

Name Of Additional Insured Person(s) Or Organization(s)	Location(s) Of Covered Operations
Information required to complete this Schedule, if not shown above, will be shown in the Declarations.	

A. Section II – Who Is An Insured is amended to include as an additional insured the person(s) or organization(s) shown in the Schedule, but only with respect to liability for "bodily injury", "property damage" or "personal and advertising injury" caused, in whole or in part, by:

1. Your acts or omissions; or
2. The acts or omissions of those acting on your behalf;

in the performance of your ongoing operations for the additional insured(s) at the location(s) designated above.

However:

1. The insurance afforded to such additional insured only applies to the extent permitted by law; and
2. If coverage provided to the additional insured is required by a contract or agreement, the insurance afforded to such additional insured will not be broader than that which you are required by the contract or agreement to provide for such additional insured.

B. With respect to the insurance afforded to these additional insureds, the following additional exclusions apply:

This insurance does not apply to "bodily injury" or "property damage" occurring after:

1. All work, including materials, parts or equipment furnished in connection with such work, on the project (other than service, maintenance or repairs) to be performed by or on behalf of the additional insured(s) at the location of the covered operations has been completed; or
2. That portion of "your work" out of which the injury or damage arises has been put to its intended use by any person or organization other than another contractor or subcontractor engaged in performing operations for a principal as a part of the same project.

SAMPLE

 © Insurance Services Office, Inc., 2012

Reproduction of Insurance Services Office, Inc. Form

C. With respect to the insurance afforded to these additional insureds, the following is added to **Section III – Limits Of Insurance:**

If coverage provided to the additional insured is required by a contract or agreement, the most we will pay on behalf of the additional insured is the amount of insurance:

1. Required by the contract or agreement; or

2. Available under the applicable Limits of Insurance shown in the Declarations;

whichever is less.

This endorsement shall not increase the applicable Limits of Insurance shown in the Declarations.

SAMPLE

 © Insurance Services Office, Inc., 2012

Reproduction of Insurance Services Office, Inc. Form

POLICY NUMBER:

COMMERCIAL GENERAL LIABILITY
CG 20 10 07 04

THIS ENDORSEMENT CHANGES THE POLICY. PLEASE READ IT CAREFULLY.

ADDITIONAL INSURED – OWNERS, LESSEES OR CONTRACTORS – SCHEDULED PERSON OR ORGANIZATION

This endorsement modifies insurance provided under the following:

COMMERCIAL GENERAL LIABILITY COVERAGE PART

SCHEDULE

Name Of Additional Insured Person(s) Or Organization(s):	Location(s) Of Covered Operations
Information required to complete this Schedule, if not shown above, will be shown in the Declarations.	

A. **Section II – Who Is An Insured** is amended to include as an additional insured the person(s) or organization(s) shown in the Schedule, but only with respect to liability for "bodily injury", "property damage" or "personal and advertising injury" caused, in whole or in part, by:

1. Your acts or omissions; or
2. The acts or omissions of those acting on your behalf;

in the performance of your ongoing operations for the additional insured(s) at the location(s) designated above.

B. With respect to the insurance afforded to these additional insureds, the following additional exclusions apply:

This insurance does not apply to "bodily injury" or "property damage" occurring after:

1. All work, including materials, parts or equipment furnished in connection with such work, on the project (other than service, maintenance or repairs) to be performed by or on behalf of the additional insured(s) at the location of the covered operations has been completed; or
2. That portion of "your work" out of which the injury or damage arises has been put to its intended use by any person or organization other than another contractor or subcontractor engaged in performing operations for a principal as a part of the same project.

SAMPLE

 © ISO Properties, Inc., 2004

Reproduction of Insurance Services Office, Inc. Form

POLICY NUMBER: COMMERCIAL GENERAL LIABILITY

THIS ENDORSEMENT CHANGES THE POLICY. PLEASE READ IT CAREFULLY.

ADDITIONAL INSURED – OWNERS, LESSEES OR CONTRACTORS – (FORM B)

This endorsement modifies insurance provided under the following:

COMMERCIAL GENERAL LIABILITY COVERAGE PART.

SCHEDULE

Name of Person or Organization:

(If no entry appears above, information required to complete this endorsement will be shown in the Declarations as applicable to this endorsement.)

WHO IS AN INSURED (Section II) is amended to include as an insured the person or organization shown in the Schedule, but only with respect to liability arising out of "your work" for that insured by or for you.

SAMPLE

Modifications to ISO form CG 20 10 11 85:

1. The Insured scheduled above includes the Insured's officers, officials, employees and volunteers.
2. This insurance shall be primary as respects the Insured shown in the schedule above, or if excess, shall stand in an unbroken chain of coverage excess of the Named Insured's scheduled underlying primary coverage. In either event, any other insurance maintained by the Insured scheduled above shall be in excess of this insurance and shall not be called upon to contribute with it.
3. The insurance afforded by this policy shall not be canceled except after thirty days prior written notice by certified mail return receipt requested has been given to the Entity.

CG 20 10 11 85 Copyright, Insurance Services Office, Inc., 1984 Page 1 of 1 ☐

Reproduction of Insurance Services Office, Inc. Form

COMMERCIAL GENERAL LIABILITY
CG 20 33 04 13

THIS ENDORSEMENT CHANGES THE POLICY. PLEASE READ IT CAREFULLY.

ADDITIONAL INSURED – OWNERS, LESSEES OR CONTRACTORS – AUTOMATIC STATUS WHEN REQUIRED IN CONSTRUCTION AGREEMENT WITH YOU

This endorsement modifies insurance provided under the following:

COMMERCIAL GENERAL LIABILITY COVERAGE PART

A. **Section II – Who Is An Insured** is amended to include as an additional insured any person or organization for whom you are performing operations when you and such person or organization have agreed in writing in a contract or agreement that such person or organization be added as an additional insured on your policy. Such person or organization is an additional insured only with respect to liability for "bodily injury", "property damage" or "personal and advertising injury" caused, in whole or in part, by:

1. Your acts or omissions; or
2. The acts or omissions of those acting on your behalf;

in the performance of your ongoing operations for the additional insured.

However, the insurance afforded to such additional insured:

1. Only applies to the extent permitted by law; and
2. Will not be broader than that which you are required by the contract or agreement to provide for such additional insured.

A person's or organization's status as an additional insured under this endorsement ends when your operations for that additional insured are completed.

B. With respect to the insurance afforded to these additional insureds, the following additional exclusions apply:

This insurance does not apply to:

1. "Bodily injury", "property damage" or "personal and advertising injury" arising out of the rendering of, or the failure to render, any professional architectural, engineering or surveying services, including:
   a. The preparing, approving, or failing to prepare or approve, maps, shop drawings, opinions, reports, surveys, field orders, change orders or drawings and specifications; or
   b. Supervisory, inspection, architectural or engineering activities.

This exclusion applies even if the claims against any insured allege negligence or other wrongdoing in the supervision, hiring, employment, training or monitoring of others by that insured, if the "occurrence" which caused the "bodily injury" or "property damage", or the offense which caused the "personal and advertising injury", involved the rendering of or the failure to render any professional architectural, engineering or surveying services.

SAMPLE

 © Insurance Services Office, Inc., 2012

Reproduction of Insurance Services Office, Inc. Form

2. "Bodily injury" or "property damage" occurring after:
   a. All work, including materials, parts or equipment furnished in connection with such work, on the project (other than service, maintenance or repairs) to be performed by or on behalf of the additional insured(s) at the location of the covered operations has been completed; or
   b. That portion of "your work" out of which the injury or damage arises has been put to its intended use by any person or organization other than another contractor or subcontractor engaged in performing operations for a principal as a part of the same project.

C. With respect to the insurance afforded to these additional insureds, the following is added to **Section III – Limits Of Insurance:**

The most we will pay on behalf of the additional insured is the amount of insurance:

1. Required by the contract or agreement you have entered into with the additional insured; or
2. Available under the applicable Limits of Insurance shown in the Declarations;

whichever is less.

This endorsement shall not increase the applicable Limits of Insurance shown in the Declarations.

SAMPLE

 © Insurance Services Office, Inc., 2012

Reproduction of Insurance Services Office, Inc. Form

POLICY NUMBER:

COMMERCIAL GENERAL LIABILITY
CG 20 37 07 04

THIS ENDORSEMENT CHANGES THE POLICY. PLEASE READ IT CAREFULLY.

ADDITIONAL INSURED – OWNERS, LESSEES OR CONTRACTORS – COMPLETED OPERATIONS

This endorsement modifies insurance provided under the following:

COMMERCIAL GENERAL LIABILITY COVERAGE PART

SCHEDULE

Name Of Additional Insured Person(s) Or Organization(s):	Location And Description Of Completed Operations
Information required to complete this Schedule, if not shown above, will be shown in the Declarations.	

Section II – Who Is An Insured is amended to include as an additional insured the person(s) or organization(s) shown in the Schedule, but only with respect to liability for "bodily injury" or "property damage" caused, in whole or in part, by "your work" at the location designated and described in the schedule of this endorsement performed for that additional insured and included in the "products-completed operations hazard".

SAMPLE

Reproduction of Insurance Services Office, Inc. Form

POLICY NUMBER:

COMMERCIAL GENERAL LIABILITY
CG 20 37 04 13

THIS ENDORSEMENT CHANGES THE POLICY. PLEASE READ IT CAREFULLY.

ADDITIONAL INSURED – OWNERS, LESSEES OR CONTRACTORS – COMPLETED OPERATIONS

This endorsement modifies insurance provided under the following:

COMMERCIAL GENERAL LIABILITY COVERAGE PART
PRODUCTS/COMPLETED OPERATIONS LIABILITY COVERAGE PART

SCHEDULE

Name Of Additional Insured Person(s) Or Organization(s)	Location And Description Of Completed Operations
Information required to complete this Schedule, if not shown above, will be shown in the Declarations.	

A. Section II – Who Is An Insured is amended to include as an additional insured the person(s) or organization(s) shown in the Schedule, but only with respect to liability for "bodily injury" or "property damage" caused, in whole or in part, by "your work" at the location designated and described in the Schedule of this endorsement performed for that additional insured and included in the "products-completed operations hazard".

However:

1. The insurance afforded to such additional insured only applies to the extent permitted by law; and
2. If coverage provided to the additional insured is required by a contract or agreement, the insurance afforded to such additional insured will not be broader than that which you are required by the contract or agreement to provide for such additional insured.

B. With respect to the insurance afforded to these additional insureds, the following is added to **Section III – Limits Of Insurance:**

If coverage provided to the additional insured is required by a contract or agreement, the most we will pay on behalf of the additional insured is the amount of insurance:

1. Required by the contract or agreement; or
2. Available under the applicable Limits of Insurance shown in the Declarations;

whichever is less.

This endorsement shall not increase the applicable Limits of Insurance shown in the Declarations.

© Insurance Services Office, Inc., 2012

SAMPLE

Reproduction of Insurance Services Office, Inc. Form

COMMERCIAL GENERAL LIABILITY
CG 20 38 04 13

THIS ENDORSEMENT CHANGES THE POLICY. PLEASE READ IT CAREFULLY.

ADDITIONAL INSURED – OWNERS, LESSEES OR CONTRACTORS – AUTOMATIC STATUS FOR OTHER PARTIES WHEN REQUIRED IN WRITTEN CONSTRUCTION AGREEMENT

This endorsement modifies insurance provided under the following:

COMMERCIAL GENERAL LIABILITY COVERAGE PART

A. Section II – Who Is An Insured is amended to include as an additional insured:

1. Any person or organization for whom you are performing operations when you and such person or organization have agreed in writing in a contract or agreement that such person or organization be added as an additional insured on your policy; and

2. Any other person or organization you are required to add as an additional insured under the contract or agreement described in Paragraph **1.** above.

Such person(s) or organization(s) is an additional insured only with respect to liability for "bodily injury", "property damage" or "personal and advertising injury" caused, in whole or in part, by:

a. Your acts or omissions; or

b. The acts or omissions of those acting on your behalf;

in the performance of your ongoing operations for the additional insured.

However, the insurance afforded to such additional insured described above:

a. Only applies to the extent permitted by law; and

b. Will not be broader than that which you are required by the contract or agreement to provide for such additional insured.

A person's or organization's status as an additional insured under this endorsement ends when your operations for the person or organization described in Paragraph **1.** above are completed.

B. With respect to the insurance afforded to these additional insureds, the following additional exclusions apply:

This insurance does not apply to:

1. "Bodily injury", "property damage" or "personal and advertising injury" arising out of the rendering of, or the failure to render, any professional architectural, engineering or surveying services, including:

a. The preparing, approving, or failing to prepare or approve, maps, shop drawings, opinions, reports, surveys, field orders, change orders or drawings and specifications; or

b. Supervisory, inspection, architectural or engineering activities.

This exclusion applies even if the claims against any insured allege negligence or other wrongdoing in the supervision, hiring, employment, training or monitoring of others by that insured, if the "occurrence" which caused the "bodily injury" or "property damage", or the offense which caused the "personal and advertising injury", involved the rendering of, or the failure to render, any professional architectural, engineering or surveying services.

2. "Bodily injury" or "property damage" occurring after:

a. All work, including materials, parts or equipment furnished in connection with such work, on the project (other than service, maintenance or repairs) to be performed by or on behalf of the additional insured(s) at the location of the covered operations has been completed; or

SAMPLE

Reproduction of Insurance Services Office, Inc. Form

b. That portion of "your work" out of which the injury or damage arises has been put to its intended use by any person or organization other than another contractor or subcontractor engaged in performing operations for a principal as a part of the same project.

C. With respect to the insurance afforded to these additional insureds, the following is added to **Section III – Limits Of Insurance:**

The most we will pay on behalf of the additional insured is the amount of insurance:

1. Required by the contract or agreement described in Paragraph **A.1.;** or

2. Available under the applicable Limits of Insurance shown in the Declarations;

whichever is less.

This endorsement shall not increase the applicable Limits of Insurance shown in the Declarations.

SAMPLE

 © Insurance Services Office, Inc., 2012

Reproduction of Insurance Services Office, Inc. Form

POLICY NUMBER:

COMMERCIAL GENERAL LIABILITY
CG 20 12 04 13

THIS ENDORSEMENT CHANGES THE POLICY. PLEASE READ IT CAREFULLY.

ADDITIONAL INSURED – STATE OR GOVERNMENTAL AGENCY OR SUBDIVISION OR POLITICAL SUBDIVISION – PERMITS OR AUTHORIZATIONS

This endorsement modifies insurance provided under the following:

COMMERCIAL GENERAL LIABILITY COVERAGE PART

SCHEDULE

State Or Governmental Agency Or Subdivision Or Political Subdivision:
Information required to complete this Schedule, if not shown above, will be shown in the Declarations.

A. Section II – Who Is An Insured is amended to include as an additional insured any state or governmental agency or subdivision or political subdivision shown in the Schedule, subject to the following provisions:

1. This insurance applies only with respect to operations performed by you or on your behalf for which the state or governmental agency or subdivision or political subdivision has issued a permit or authorization.

   However:

   a. The insurance afforded to such additional insured only applies to the extent permitted by law; and

   b. If coverage provided to the additional insured is required by a contract or agreement, the insurance afforded to such additional insured will not be broader than that which you are required by the contract or agreement to provide for such additional insured.

2. This insurance does not apply to:

   a. "Bodily injury", "property damage" or "personal and advertising injury" arising out of operations performed for the federal government, state or municipality; or

   b. "Bodily injury" or "property damage" included within the "products-completed operations hazard".

B. With respect to the insurance afforded to these additional insureds, the following is added to **Section III – Limits Of Insurance**:

If coverage provided to the additional insured is required by a contract or agreement, the most we will pay on behalf of the additional insured is the amount of insurance:

1. Required by the contract or agreement; or
2. Available under the applicable Limits of Insurance shown in the Declarations;

whichever is less.

This endorsement shall not increase the applicable Limits of Insurance shown in the Declarations.

SAMPLE

 © Insurance Services Office, Inc., 2012

Reproduction of Insurance Services Office, Inc. Form

POLICY NUMBER:

COMMERCIAL GENERAL LIABILITY
CG 20 13 04 13

THIS ENDORSEMENT CHANGES THE POLICY. PLEASE READ IT CAREFULLY.

ADDITIONAL INSURED – STATE OR GOVERNMENTAL AGENCY OR SUBDIVISION OR POLITICAL SUBDIVISION – PERMITS OR AUTHORIZATIONS RELATING TO PREMISES

This endorsement modifies insurance provided under the following:

COMMERCIAL GENERAL LIABILITY COVERAGE PART

SCHEDULE

State Or Governmental Agency Or Subdivision Or Political Subdivision:
Information required to complete this Schedule, if not shown above, will be shown in the Declarations.

A. Section II – Who Is An Insured is amended to include as an additional insured any state or governmental agency or subdivision or political subdivision shown in the Schedule, subject to the following additional provision:

This insurance applies only with respect to the following hazards for which the state or governmental agency or subdivision or political subdivision has issued a permit or authorization in connection with premises you own, rent or control and to which this insurance applies:

1. The existence, maintenance, repair, construction, erection or removal of advertising signs, awnings, canopies, cellar entrances, coal holes, driveways, manholes, marquees, hoist away openings, sidewalk vaults, street banners or decorations and similar exposures; or
2. The construction, erection or removal of elevators; or
3. The ownership, maintenance or use of any elevators covered by this insurance.

However:

1. The insurance afforded to such additional insured only applies to the extent permitted by law; and
2. If coverage provided to the additional insured is required by a contract or agreement, the insurance afforded to such additional insured will not be broader than that which you are required by the contract or agreement to provide for such additional insured.

B. With respect to the insurance afforded to these additional insureds, the following is added to **Section III – Limits Of Insurance:**

If coverage provided to the additional insured is required by a contract or agreement, the most we will pay on behalf of the additional insured is the amount of insurance:

1. Required by the contract or agreement; or
2. Available under the applicable Limits of Insurance shown in the Declarations;

whichever is less.

This endorsement shall not increase the applicable Limits of Insurance shown in the Declarations.

 © Insurance Services Office, Inc., 2012

SAMPLE

Reproduction of Insurance Services Office, Inc. Form

POLICY NUMBER:

COMMERCIAL GENERAL LIABILITY
CG 20 26 12 19

THIS ENDORSEMENT CHANGES THE POLICY. PLEASE READ IT CAREFULLY.

ADDITIONAL INSURED – DESIGNATED PERSON OR ORGANIZATION

This endorsement modifies insurance provided under the following:

COMMERCIAL GENERAL LIABILITY COVERAGE PART

SCHEDULE

Name Of Additional Insured Person(s) Or Organization(s):
Information required to complete this Schedule, if not shown above, will be shown in the Declarations.

A. Section II – Who Is An Insured is amended to include as an additional insured the person(s) or organization(s) shown in the Schedule, but only with respect to liability for "bodily injury", "property damage" or "personal and advertising injury" caused, in whole or in part, by your acts or omissions or the acts or omissions of those acting on your behalf:

1. In the performance of your ongoing operations; or
2. In connection with your premises owned by or rented to you.

However:

1. The insurance afforded to such additional insured only applies to the extent permitted by law; and
2. If coverage provided to the additional insured is required by a contract or agreement, the insurance afforded to such additional insured will not be broader than that which you are required by the contract or agreement to provide for such additional insured.

B. With respect to the insurance afforded to these additional insureds, the following is added to **Section III – Limits Of Insurance:**

If coverage provided to the additional insured is required by a contract or agreement, the most we will pay on behalf of the additional insured is the amount of insurance:

1. Required by the contract or agreement; or
2. Available under the applicable limits of insurance;

whichever is less.

This endorsement shall not increase the applicable limits of insurance.

© Insurance Services Office, Inc., 2018

SAMPLE

Reproduction of Insurance Services Office, Inc. Form

COMMERCIAL GENERAL LIABILITY
CG 20 39 12 19

THIS ENDORSEMENT CHANGES THE POLICY. PLEASE READ IT CAREFULLY.

ADDITIONAL INSURED – OWNERS, LESSEES OR CONTRACTORS – AUTOMATIC STATUS WHEN REQUIRED IN WRITTEN CONSTRUCTION AGREEMENT WITH YOU (COMPLETED OPERATIONS)

This endorsement modifies insurance provided under the following:

COMMERCIAL GENERAL LIABILITY COVERAGE PART
PRODUCTS/COMPLETED OPERATIONS LIABILITY COVERAGE PART

A. Section **II** – Who Is An Insured is amended to include as an additional insured any person or organization for whom you have performed operations when you and such person or organization have agreed in writing in a contract or agreement that such person or organization be added as an additional insured on your policy. Such person or organization is an additional insured only with respect to liability for "bodily injury" or "property damage" caused, in whole or in part, by "your work" performed for that additional insured and included in the "products-completed operations hazard".

However, the insurance afforded to such additional insured:

1. Only applies to the extent permitted by law; and
2. Will not be broader than that which you are required by the contract or agreement to provide for such additional insured.

B. With respect to the insurance afforded to these additional insureds, the following additional exclusion applies:

This insurance does not apply to:

"Bodily injury" or "property damage" arising out of the rendering of, or the failure to render, any professional architectural, engineering or surveying services, including:

1. The preparing, approving, or failing to prepare or approve, maps, shop drawings, opinions, reports, surveys, field orders, change orders or drawings and specifications; or
2. Supervisory, inspection, architectural or engineering activities.

This exclusion applies even if the claims against any insured allege negligence or other wrongdoing in the supervision, hiring, employment, training or monitoring of others by that insured, if the "occurrence" which caused the "bodily injury" or "property damage" involved the rendering of or the failure to render any professional architectural, engineering or surveying services.

C. With respect to the insurance afforded to these additional insureds, the following is added to **Section III – Limits Of Insurance:**

The most we will pay on behalf of the additional insured is the amount of insurance:

1. Required by the contract or agreement you have entered into with the additional insured; or
2. Available under the applicable limits of insurance;

whichever is less.

This endorsement shall not increase the applicable limits of insurance.

SAMPLE

 © Insurance Services Office, Inc., 2018

Reproduction of Insurance Services Office, Inc. Form

COMMERCIAL GENERAL LIABILITY
CG 20 40 12 19

THIS ENDORSEMENT CHANGES THE POLICY. PLEASE READ IT CAREFULLY.

ADDITIONAL INSURED – OWNERS, LESSEES OR CONTRACTORS – AUTOMATIC STATUS FOR OTHER PARTIES WHEN REQUIRED IN WRITTEN CONSTRUCTION AGREEMENT (COMPLETED OPERATIONS)

This endorsement modifies insurance provided under the following:

COMMERCIAL GENERAL LIABILITY COVERAGE PART
PRODUCTS/COMPLETED OPERATIONS LIABILITY COVERAGE PART

A. Section II – Who Is An Insured is amended to include as an additional insured:

1. Any person or organization for whom you have performed operations when you and such person or organization have agreed in writing in a contract or agreement that such person or organization be added as an additional insured on your policy; and
2. Any other person or organization you are required to add as an additional insured under the contract or agreement described in Paragraph **1.** above.

Such person(s) or organization(s) is an additional insured only with respect to liability for "bodily injury" or "property damage" caused, in whole or in part, by "your work" performed for the additional insured described in Paragraph **1.** or **2.** above and included in the "products-completed operations hazard".

However, the insurance afforded to such additional insured described above:

a. Only applies to the extent permitted by law; and
b. Will not be broader than that which you are required by the contract or agreement to provide for such additional insured.

B. With respect to the insurance afforded to these additional insureds, the following additional exclusion applies:

This insurance does not apply to:

"Bodily injury" or "property damage" arising out of the rendering of, or the failure to render, any professional architectural, engineering or surveying services, including:

1. The preparing, approving, or failing to prepare or approve, maps, shop drawings, opinions, reports, surveys, field orders, change orders or drawings and specifications; or
2. Supervisory, inspection, architectural or engineering activities.

This exclusion applies even if the claims against any insured allege negligence or other wrongdoing in the supervision, hiring, employment, training or monitoring of others by that insured, if the "occurrence" which caused the "bodily injury" or "property damage" involved the rendering of, or the failure to render, any professional architectural, engineering or surveying services.

SAMPLE

 © Insurance Services Office, Inc., 2018

Reproduction of Insurance Services Office, Inc. Form

C. With respect to the insurance afforded to these additional insureds, the following is added to **Section III – Limits Of Insurance:**

The most we will pay on behalf of the additional insured is the amount of insurance:

1. Required by the contract or agreement described in Paragraph **A.1.**; or

2. Available under the applicable limits of insurance;

whichever is less.

This endorsement shall not increase the applicable limits of insurance.

SAMPLE

 © Insurance Services Office, Inc., 2018

Reproduction of Insurance Services Office, Inc. Form

POLICY NUMBER:

COMMERCIAL GENERAL LIABILITY
CG 24 04 05 09

WAIVER OF TRANSFER OF RIGHTS OF RECOVERY AGAINST OTHERS TO US

This endorsement modifies insurance provided under the following:

COMMERCIAL GENERAL LIABILITY COVERAGE PART
PRODUCTS/COMPLETED OPERATIONS LIABILITY COVERAGE PART

SCHEDULE

Name Of Person Or Organization:
Information required to complete this Schedule, if not shown above, will be shown in the Declarations.

The following is added to Paragraph **8. Transfer Of Rights Of Recovery Against Others To Us** of **Section IV – Conditions:**

We waive any right of recovery we may have against the person or organization shown in the Schedule above because of payments we make for injury or damage arising out of your ongoing operations or "your work" done under a contract with that person or organization and included in the "products-completed operations hazard". This waiver applies only to the person or organization shown in the Schedule above.

SAMPLE

 © Insurance Services Office, Inc., 2008

Reproduction of Insurance Services Office, Inc. Form

COMMERCIAL GENERAL LIABILITY
CG 24 53 12 19

THIS ENDORSEMENT CHANGES THE POLICY. PLEASE READ IT CAREFULLY.

WAIVER OF TRANSFER OF RIGHTS OF RECOVERY AGAINST OTHERS TO US (WAIVER OF SUBROGATION) – AUTOMATIC

This endorsement modifies insurance provided under the following:

COMMERCIAL GENERAL LIABILITY COVERAGE PART
ELECTRONIC DATA LIABILITY COVERAGE PART
LIQUOR LIABILITY COVERAGE PART
POLLUTION LIABILITY COVERAGE PART DESIGNATED SITES
POLLUTION LIABILITY LIMITED COVERAGE PART DESIGNATED SITES
PRODUCTS/COMPLETED OPERATIONS LIABILITY COVERAGE PART
RAILROAD PROTECTIVE LIABILITY COVERAGE PART
UNDERGROUND STORAGE TANK POLICY DESIGNATED TANKS

The following is added to Paragraph **8. Transfer Of Rights Of Recovery Against Others To Us** of **Section IV – Conditions:**

We waive any right of recovery against any person or organization, because of any payment we make under this Coverage Part, to whom the insured has waived its right of recovery in a written contract or agreement. Such waiver by us applies only to the extent that the insured has waived its right of recovery against such person or organization prior to loss.

SAMPLE

 © Insurance Services Office, Inc., 2018

Reproduction of Insurance Services Office, Inc. Form

POLICY NUMBER:

COMMERCIAL GENERAL LIABILITY
CG 25 01 07 98

THIS ENDORSEMENT CHANGES THE POLICY. PLEASE READ IT CAREFULLY.

AMENDMENT OF LIMITS OF INSURANCE (DESIGNATED PROJECT OR PREMISES)

This endorsement modifies insurance provided under the following:

COMMERCIAL GENERAL LIABILITY COVERAGE PART

SCHEDULE

	Limits Of Insurance
General Aggregate Limit	$ _____
Products-Completed Operations Aggregate Limit	$ _____
Personal & Advertising Injury Limit	$ _____
Each Occurrence Limit	$ _____
Damage To Premises Rented To You Limit	$ _____ Any One Premises
Medical Expense Limit	$ _____ Any One Person
Designation Of Project Or Premises:	

(If no entry appears above, information required to complete this endorsement will be shown in the Declarations as applicable to this endorsement.)

The limits of insurance shown in the Declarations are replaced by the limits designated in the Schedule with respect to the project or premises entered above. These limits are inclusive of and are not in addition to the limits being replaced.

SAMPLE

Reproduction of Insurance Services Office, Inc. Form

POLICY NUMBER:

COMMERCIAL GENERAL LIABILITY
CG 25 02 07 98

THIS ENDORSEMENT CHANGES THE POLICY. PLEASE READ IT CAREFULLY.

AMENDMENT OF LIMITS OF INSURANCE

This endorsement modifies insurance provided under the following:

COMMERCIAL GENERAL LIABILITY COVERAGE PART

SCHEDULE

	Limits Of Insurance
General Aggregate Limit	$ _____
Products-Completed Operations Aggregate Limit	$ _____
Personal & Advertising Injury Limit	$ _____
Each Occurrence Limit	$ _____
Damage To Premises Rented To You Limit	$ _____ Any One Premises
Medical Expense Limit	$ _____ Any One Person

(If no entry appears above, information required to complete this endorsement will be shown in the Declarations as applicable to this endorsement.)

The limits of insurance shown in the Declarations are replaced by the limits designated in the Schedule or in the Declarations as subject to this endorsement with respect to which an entry is made.

SAMPLE

Reproduction of Insurance Services Office, Inc. Form

POLICY NUMBER:

COMMERCIAL GENERAL LIABILITY
CG 25 03 05 09

THIS ENDORSEMENT CHANGES THE POLICY. PLEASE READ IT CAREFULLY.

DESIGNATED CONSTRUCTION PROJECT(S) GENERAL AGGREGATE LIMIT

This endorsement modifies insurance provided under the following:

COMMERCIAL GENERAL LIABILITY COVERAGE PART

SCHEDULE

Designated Construction Project(s):
Information required to complete this Schedule, if not shown above, will be shown in the Declarations.

A. For all sums which the insured becomes legally obligated to pay as damages caused by "occurrences" under Section **I** – Coverage **A**, and for all medical expenses caused by accidents under Section **I** – Coverage **C**, which can be attributed only to ongoing operations at a single designated construction project shown in the Schedule above:

1. A separate Designated Construction Project General Aggregate Limit applies to each designated construction project, and that limit is equal to the amount of the General Aggregate Limit shown in the Declarations.
2. The Designated Construction Project General Aggregate Limit is the most we will pay for the sum of all damages under Coverage **A**, except damages because of "bodily injury" or "property damage" included in the "products-completed operations hazard", and for medical expenses under Coverage **C** regardless of the number of:
   a. Insureds;
   b. Claims made or "suits" brought; or
   c. Persons or organizations making claims or bringing "suits".
3. Any payments made under Coverage **A** for damages or under Coverage **C** for medical expenses shall reduce the Designated Construction Project General Aggregate Limit for that designated construction project. Such payments shall not reduce the General Aggregate Limit shown in the Declarations nor shall they reduce any other Designated Construction Project General Aggregate Limit for any other designated construction project shown in the Schedule above.
4. The limits shown in the Declarations for Each Occurrence, Damage To Premises Rented To You and Medical Expense continue to apply. However, instead of being subject to the General Aggregate Limit shown in the Declarations, such limits will be subject to the applicable Designated Construction Project General Aggregate Limit.

SAMPLE

 © Insurance Services Office, Inc., 2008

Reproduction of Insurance Services Office, Inc. Form

B. For all sums which the insured becomes legally obligated to pay as damages caused by "occurrences" under Section **I** – Coverage **A**, and for all medical expenses caused by accidents under Section **I** – Coverage **C**, which cannot be attributed only to ongoing operations at a single designated construction project shown in the Schedule above:

1. Any payments made under Coverage **A** for damages or under Coverage **C** for medical expenses shall reduce the amount available under the General Aggregate Limit or the Products-completed Operations Aggregate Limit, whichever is applicable; and
2. Such payments shall not reduce any Designated Construction Project General Aggregate Limit.

C. When coverage for liability arising out of the "products-completed operations hazard" is provided, any payments for damages because of "bodily injury" or "property damage" included in the "products-completed operations hazard" will reduce the Products-completed Operations Aggregate Limit, and not reduce the General Aggregate Limit nor the Designated Construction Project General Aggregate Limit.

D. If the applicable designated construction project has been abandoned, delayed, or abandoned and then restarted, or if the authorized contracting parties deviate from plans, blueprints, designs, specifications or timetables, the project will still be deemed to be the same construction project.

E. The provisions of Section **III** – Limits Of Insurance not otherwise modified by this endorsement shall continue to apply as stipulated.

SAMPLE

 © Insurance Services Office, Inc., 2008

Reproduction of Insurance Services Office, Inc. Form

POLICY NUMBER:

COMMERCIAL GENERAL LIABILITY
CG 25 04 05 09

THIS ENDORSEMENT CHANGES THE POLICY. PLEASE READ IT CAREFULLY.

DESIGNATED LOCATION(S) GENERAL AGGREGATE LIMIT

This endorsement modifies insurance provided under the following:

COMMERCIAL GENERAL LIABILITY COVERAGE PART

SCHEDULE

Designated Location(s):
Information required to complete this Schedule, if not shown above, will be shown in the Declarations.

A. For all sums which the insured becomes legally obligated to pay as damages caused by "occurrences" under Section **I** – Coverage **A**, and for all medical expenses caused by accidents under Section **I** – Coverage **C**, which can be attributed only to operations at a single designated "location" shown in the Schedule above:

1. A separate Designated Location General Aggregate Limit applies to each designated "location", and that limit is equal to the amount of the General Aggregate Limit shown in the Declarations.

2. The Designated Location General Aggregate Limit is the most we will pay for the sum of all damages under Coverage **A**, except damages because of "bodily injury" or "property damage" included in the "products-completed operations hazard", and for medical expenses under Coverage **C** regardless of the number of:

a. Insureds;

b. Claims made or "suits" brought; or

c. Persons or organizations making claims or bringing "suits".

3. Any payments made under Coverage **A** for damages or under Coverage **C** for medical expenses shall reduce the Designated Location General Aggregate Limit for that designated "location". Such payments shall not reduce the General Aggregate Limit shown in the Declarations nor shall they reduce any other Designated Location General Aggregate Limit for any other designated "location" shown in the Schedule above.

4. The limits shown in the Declarations for Each Occurrence, Damage To Premises Rented To You and Medical Expense continue to apply. However, instead of being subject to the General Aggregate Limit shown in the Declarations, such limits will be subject to the applicable Designated Location General Aggregate Limit.

SAMPLE

 © Insurance Services Office, Inc., 2008

Reproduction of Insurance Services Office, Inc. Form

B. For all sums which the insured becomes legally obligated to pay as damages caused by "occurrences" under Section **I** – Coverage **A**, and for all medical expenses caused by accidents under Section **I** – Coverage **C**, which cannot be attributed only to operations at a single designated "location" shown in the Schedule above:

1. Any payments made under Coverage **A** for damages or under Coverage **C** for medical expenses shall reduce the amount available under the General Aggregate Limit or the Products-completed Operations Aggregate Limit, whichever is applicable; and
2. Such payments shall not reduce any Designated Location General Aggregate Limit.

C. When coverage for liability arising out of the "products-completed operations hazard" is provided, any payments for damages because of "bodily injury" or "property damage" included in the "products-completed operations hazard" will reduce the Products-completed Operations Aggregate Limit, and not reduce the General Aggregate Limit nor the Designated Location General Aggregate Limit.

D. For the purposes of this endorsement, the **Definitions** Section is amended by the addition of the following definition:

"Location" means premises involving the same or connecting lots, or premises whose connection is interrupted only by a street, roadway, waterway or right-of-way of a railroad.

E. The provisions of Section **III** – Limits Of Insurance not otherwise modified by this endorsement shall continue to apply as stipulated.

SAMPLE

 © Insurance Services Office, Inc., 2008

Reproduction of State Compensation Insurance Fund Form

STATE COMPENSATION INSURANCE FUND	P.O. BOX 807, SAN FRANCISCO, CALIFORNIA 94101 CERTIFICATE OF WORKERS' COMPENSATION INSURANCE
	POLICY NUMBER: CERTIFICATE EXPIRES:

This is to certify that we have issued a valid Workers' Compensation insurance policy in a form approved by the California Insurance Commissioner to the employer named below for the policy period indicated.

This policy is not subject to cancellation by the Fund except upon 30 day's written notice to the employer.

We will give you 30 day's advance notice should this policy be canceled prior to its normal expiration.

This certificate of insurance is not an insurance policy and does not amend, extend or alter the coverage afforded by the policies listed herein. Notwithstanding any requirement, term or condition of any contract or other document with respect to which this certificate may be issued or may pertain, the insurance afforded by the policies described herein is subject to all the terms, exclusions and conditions of such policies.

_____
PRESIDENT

(Note: following text is typewritten addition to printed form)

THE STATE COMPENSATION INSURANCE FUND WAIVES ANY RIGHT OF SUBROGATION ENDORSEMENT #2570. AGAINST (ENTITY) _____, ITS OFFICIALS, EMPLOYEES AND VOLUNTEERS BY REASON OF ANY PAYMENT UNDER THIS POLICY.

ENDORSEMENT #0015 ENTITLED ADDITIONAL INSURED EMPLOYER EFFECTIVE 07-20-87 IS ATTACHED TO AND FORMS A PART OF THIS POLICY. ADDITIONAL INSURED EMPLOYER: _____.

ENDORSEMENT #2065 ENTITLED 30 DAY CANCELLATION NOTICE EFFECTIVE 07-20-87 IS ATTACHED TO AND FORMS A PART OF THIS POLICY.

LIABILITY OF THE STATE COMPENSATION INSURANCE FUND IS LIMITED TO $3,000,000 FOR ALL DAMAGES FOR ONE OR MORE CLAIMS RESULTING FROM EACH ACCIDENT OF OCCURRENCE ARISING OUT OF ANY ONE EVENT.

_____
EMPLOYER

SAMPLE

Reproduction of State Compensation Insurance Fund Form

STATE COMPENSATION INSURANCE FUND	ADDITIONAL INSURED EMPLOYER ENDORSEMENT AGREEMENT
Home Office San Francisco	All Effective Dates are at 12:01 AM Pacific Standard Time or the Time Indicated at Pacific Standard Time

ANYTHING IN THIS POLICY TO THE CONTRACT NOTWITHSTANDING, IT IS AGREED THAT

EMPLOYER:	NAMED OF ADDITIONAL INSURED (ONE NAME PER ENDORSEMENT)

IS HEREBY NAMED AS AN ADDITIONAL INSURED EMPLOYER ON THIS POLICY BUT ONLY AS RESPECTS EMPLOYEES WHOSE NAMES APPEAR ON THE PAYROLL RECORDS OF

(POLICY NAME)

(HEREIN CALLED THE PRIMARY INSURED) WHILE THOSE EMPLOYEES ARE ENGAGED IN WORK UNDER THE SIMULTANEOUS DIRECTION AND CONTROL OF THE PRIMARY INSURED AND THE ADDITIONAL INSURED EMPLOYER.

IT IS FURTHER AGREED THAT THE PAYMENT OF THE FULL PREMIUM DUE AND PAYABLE UNDER THIS POLICY SHALL REMAIN THE SOLE RESPONSIBILITY OF THE PRIMARY INSURED.

NOTHING IN THIS ENDORSEMENT CONTAINED SHALL BE HALED TO VARY, ALTER, WAIVE OR EXTEND ANY OF THE TERMS, CONDITIONS, AGREEMENTS OR LIMITATIONS OF THIS POLICY OTHER THAN AS STATED. NOTHING ELSEWHERE IN THIS POLICY SHALL BE HELD TO VARY, ALTER, WAIVE OR LIMIT THE TERMS, CONDITIONS, AGREEMENTS OR LIMITATIONS OF THIS ENDORSEMENT.

COUNTERSIGNED AND ISSUED AT SAN FRANCISCO 0015

SAMPLE

Reproduction of State Compensation Insurance Fund Form

STATE COMPENSATION INSURANCE FUND	ADDITIONAL INSURED EMPLOYER ENDORSEMENT AGREEMENT
Home Office San Francisco	All Effective Dates are at 12:01 AM Pacific Standard Time or the Time Indicated at Pacific Standard Time

ANYTHING IN THIS POLICY TO THE CONTRARY NOTWITHSTANDING, IT IS AGREED THAT THE STATE COMPENSATION INSURANCE FUND WAIVES ANY RIGHT OF SUBROGATION AGAINST:

(SPECIFY 3RD PARTY REQUESTING WAIVER: ONE NAME PER ENDORSEMENT)

WHICH MIGHT ARISE BY REASON OF ANY PAYMENT UNDER THIS POLICY IN CONNECTION WITH WORK PERFORMED BY:

(POLICY NAME)

IT IS FURTHER AGREED THAT THE INSURED SHALL MAINTAIN PAYROLL RECORDS ACCURATELY SEGREGATING THE REMUNERATION OF EMPLOYEES WHILE ENGAGED IN WORK FOR THE ABOVE EMPLOYER.

IT IS FURTHER AGREED THAT PREMIUM ON THE EARNINGS OF SUCH EMPLOYEES SHALL BE INCREASED BY _____%.

NOTHING IN THIS ENDORSEMENT CONTAINED SHALL BE HALED TO VARY, ALTER, WAIVE OR EXTEND ANY OF THE TERMS, CONDITIONS, AGREEMENTS OR LIMITATIONS OF THIS POLICY OTHER THAN AS STATED. NOTHING ELSEWHERE IN THIS POLICY SHALL BEHELD TO VARY, ALTER, WAIVE OR LIMIT THE TERMS, CONDITIONS, AGREEMENTS OR LIMITATIONS OF THIS ENDORSEMENT.

COUNTERSIGNED AND ISSUED AT SAN FRANCISCO 2570

SAMPLE

Reproduction of State Compensation Insurance Fund Form

STATE COMPENSATION INSURANCE FUND	ADDITIONAL INSURED EMPLOYER ENDORSEMENT AGREEMENT
Home Office San Francisco	All Effective Dates are at 12:01 AM Pacific Standard Time or the Time Indicated at Pacific Standard Time

ANYTHING IN THIS POLICY TO THE CONTRARY NOTWITHSTANDING, IT IS AGREED THAT THIS POLICY SHALL NOT BE CANCELED UNTIL:

(SPECIFY NUMBER) _____ DAYS

AFTER WRITTEN NOTICE OF SUCH CANCELLATION HAS BEEN PLACED IN THE MAIL BY STATE FUND TO CURRENT HOLDERS OF CERTIFICATE OF WORKERS' COMPENSATION INSURANCE.

NOTHING IN THIS ENDORSEMENT CONTAINED SHALL BE HALED TO VARY, ALTER, WAIVE OR EXTEND ANY OF THE TERMS, CONDITIONS, AGREEMENTS OR LIMITATIONS OF THIS POLICY OTHER THAN AS STATED. NOTHING ELSEWHERE IN THIS POLICY SHALL BEHELD TO VARY, ALTER, WAIVE OR LIMIT THE TERMS, CONDITIONS, AGREEMENTS OR LIMITATIONS OF THIS ENDORSEMENT.

COUNTERSIGNED AND ISSUED AT SAN FRANCISCO 0015

SAMPLE

Reproduction of Insurance Services Office, Inc. Form

COMMERCIAL GENERAL LIABILITY
CG 00 01 04 13

COMMERCIAL GENERAL LIABILITY COVERAGE FORM

Various provisions in this policy restrict coverage. Read the entire policy carefully to determine rights, duties and what is and is not covered.

Throughout this policy the words "you" and "your" refer to the Named Insured shown in the Declarations, and any other person or organization qualifying as a Named Insured under this policy. The words "we", "us" and "our" refer to the company providing this insurance.

The word "insured" means any person or organization qualifying as such under Section **II** – Who Is An Insured.

Other words and phrases that appear in quotation marks have special meaning. Refer to Section **V** – Definitions.

SECTION I – COVERAGES

COVERAGE A – BODILY INJURY AND PROPERTY DAMAGE LIABILITY

1. Insuring Agreement

a. We will pay those sums that the insured becomes legally obligated to pay as damages because of "bodily injury" or "property damage" to which this insurance applies. We will have the right and duty to defend the insured against any "suit" seeking those damages. However, we will have no duty to defend the insured against any "suit" seeking damages for "bodily injury" or "property damage" to which this insurance does not apply. We may, at our discretion, investigate any "occurrence" and settle any claim or "suit" that may result. But:

(1) The amount we will pay for damages is limited as described in Section **III** – Limits Of Insurance; and

(2) Our right and duty to defend ends when we have used up the applicable limit of insurance in the payment of judgments or settlements under Coverages **A** or **B** or medical expenses under Coverage **C.**

No other obligation or liability to pay sums or perform acts or services is covered unless explicitly provided for under Supplementary Payments – Coverages **A** and **B.**

b. This insurance applies to "bodily injury" and "property damage" only if:

(1) The "bodily injury" or "property damage" is caused by an "occurrence" that takes place in the "coverage territory";

(2) The "bodily injury" or "property damage" occurs during the policy period; and

(3) Prior to the policy period, no insured listed under Paragraph **1.** of Section **II** – Who Is An Insured and no "employee" authorized by you to give or receive notice of an "occurrence" or claim, knew that the "bodily injury" or "property damage" had occurred, in whole or in part. If such a listed insured or authorized "employee" knew, prior to the policy period, that the "bodily injury" or "property damage" occurred, then any continuation, change or resumption of such "bodily injury" or "property damage" during or after the policy period will be deemed to have been known prior to the policy period.

c. "Bodily injury" or "property damage" which occurs during the policy period and was not, prior to the policy period, known to have occurred by any insured listed under Paragraph **1.** of Section **II** – Who Is An Insured or any "employee" authorized by you to give or receive notice of an "occurrence" or claim, includes any continuation, change or resumption of that "bodily injury" or "property damage" after the end of the policy period.

d. "Bodily injury" or "property damage" will be deemed to have been known to have occurred at the earliest time when any insured listed under Paragraph **1.** of Section **II** – Who Is An Insured or any "employee" authorized by you to give or receive notice of an "occurrence" or claim:

(1) Reports all, or any part, of the "bodily injury" or "property damage" to us or any other insurer;

(2) Receives a written or verbal demand or claim for damages because of the "bodily injury" or "property damage"; or

(3) Becomes aware by any other means that "bodily injury" or "property damage" has occurred or has begun to occur.

e. Damages because of "bodily injury" include damages claimed by any person or organization for care, loss of services or death resulting at any time from the "bodily injury".

SAMPLE

2. Exclusions

This insurance does not apply to:

a. Expected Or Intended Injury

"Bodily injury" or "property damage" expected or intended from the standpoint of the insured. This exclusion does not apply to "bodily injury" resulting from the use of reasonable force to protect persons or property.

b. Contractual Liability

"Bodily injury" or "property damage" for which the insured is obligated to pay damages by reason of the assumption of liability in a contract or agreement. This exclusion does not apply to liability for damages:

(1) That the insured would have in the absence of the contract or agreement; or

(2) Assumed in a contract or agreement that is an "insured contract", provided the "bodily injury" or "property damage" occurs subsequent to the execution of the contract or agreement. Solely for the purposes of liability assumed in an "insured contract", reasonable attorneys' fees and necessary litigation expenses incurred by or for a party other than an insured are deemed to be damages because of "bodily injury" or "property damage", provided:

(a) Liability to such party for, or for the cost of, that party's defense has also been assumed in the same "insured contract"; and

(b) Such attorneys' fees and litigation expenses are for defense of that party against a civil or alternative dispute resolution proceeding in which damages to which this insurance applies are alleged.

c. Liquor Liability

"Bodily injury" or "property damage" for which any insured may be held liable by reason of:

(1) Causing or contributing to the intoxication of any person;

(2) The furnishing of alcoholic beverages to a person under the legal drinking age or under the influence of alcohol; or

(3) Any statute, ordinance or regulation relating to the sale, gift, distribution or use of alcoholic beverages.

This exclusion applies even if the claims against any insured allege negligence or other wrongdoing in:

(a) The supervision, hiring, employment, training or monitoring of others by that insured; or

(b) Providing or failing to provide transportation with respect to any person that may be under the influence of alcohol;

if the "occurrence" which caused the "bodily injury" or "property damage", involved that which is described in Paragraph **(1), (2)** or **(3)** above.

However, this exclusion applies only if you are in the business of manufacturing, distributing, selling, serving or furnishing alcoholic beverages. For the purposes of this exclusion, permitting a person to bring alcoholic beverages on your premises, for consumption on your premises, whether or not a fee is charged or a license is required for such activity, is not by itself considered the business of selling, serving or furnishing alcoholic beverages.

d. Workers' Compensation And Similar Laws

Any obligation of the insured under a workers' compensation, disability benefits or unemployment compensation law or any similar law.

e. Employer's Liability

"Bodily injury" to:

(1) An "employee" of the insured arising out of and in the course of:

(a) Employment by the insured; or

(b) Performing duties related to the conduct of the insured's business; or

(2) The spouse, child, parent, brother or sister of that "employee" as a consequence of Paragraph **(1)** above.

This exclusion applies whether the insured may be liable as an employer or in any other capacity and to any obligation to share damages with or repay someone else who must pay damages because of the injury.

This exclusion does not apply to liability assumed by the insured under an "insured contract".

SAMPLE

f. Pollution

(1) "Bodily injury" or "property damage" arising out of the actual, alleged or threatened discharge, dispersal, seepage, migration, release or escape of "pollutants":

(a) At or from any premises, site or location which is or was at any time owned or occupied by, or rented or loaned to, any insured. However, this subparagraph does not apply to:

(i) "Bodily injury" if sustained within a building and caused by smoke, fumes, vapor or soot produced by or originating from equipment that is used to heat, cool or dehumidify the building, or equipment that is used to heat water for personal use, by the building's occupants or their guests;

(ii) "Bodily injury" or "property damage" for which you may be held liable, if you are a contractor and the owner or lessee of such premises, site or location has been added to your policy as an additional insured with respect to your ongoing operations performed for that additional insured at that premises, site or location and such premises, site or location is not and never was owned or occupied by, or rented or loaned to, any insured, other than that additional insured; or

(iii) "Bodily injury" or "property damage" arising out of heat, smoke or fumes from a "hostile fire";

(b) At or from any premises, site or location which is or was at any time used by or for any insured or others for the handling, storage, disposal, processing or treatment of waste;

(c) Which are or were at any time transported, handled, stored, treated, disposed of, or processed as waste by or for:

(i) Any insured; or

(ii) Any person or organization for whom you may be legally responsible; or

(d) At or from any premises, site or location on which any insured or any contractors or subcontractors working directly or indirectly on any insured's behalf are performing operations if the "pollutants" are brought on or to the premises, site or location in connection with such operations by such insured, contractor or subcontractor. However, this subparagraph does not apply to:

(i) "Bodily injury" or "property damage" arising out of the escape of fuels, lubricants or other operating fluids which are needed to perform the normal electrical, hydraulic or mechanical functions necessary for the operation of "mobile equipment" or its parts, if such fuels, lubricants or other operating fluids escape from a vehicle part designed to hold, store or receive them. This exception does not apply if the "bodily injury" or "property damage" arises out of the intentional discharge, dispersal or release of the fuels, lubricants or other operating fluids, or if such fuels, lubricants or other operating fluids are brought on or to the premises, site or location with the intent that they be discharged, dispersed or released as part of the operations being performed by such insured, contractor or subcontractor;

(ii) "Bodily injury" or "property damage" sustained within a building and caused by the release of gases, fumes or vapors from materials brought into that building in connection with operations being performed by you or on your behalf by a contractor or subcontractor; or

(iii) "Bodily injury" or "property damage" arising out of heat, smoke or fumes from a "hostile fire".

(e) At or from any premises, site or location on which any insured or any contractors or subcontractors working directly or indirectly on any insured's behalf are performing operations if the operations are to test for, monitor, clean up, remove, contain, treat, detoxify or neutralize, or in any way respond to, or assess the effects of, "pollutants".

SAMPLE

(2) Any loss, cost or expense arising out of any:

(a) Request, demand, order or statutory or regulatory requirement that any insured or others test for, monitor, clean up, remove, contain, treat, detoxify or neutralize, or in any way respond to, or assess the effects of, "pollutants"; or

(b) Claim or suit by or on behalf of a governmental authority for damages because of testing for, monitoring, cleaning up, removing, containing, treating, detoxifying or neutralizing, or in any way responding to, or assessing the effects of, "pollutants".

However, this paragraph does not apply to liability for damages because of "property damage" that the insured would have in the absence of such request, demand, order or statutory or regulatory requirement, or such claim or "suit" by or on behalf of a governmental authority.

g. Aircraft, Auto Or Watercraft

"Bodily injury" or "property damage" arising out of the ownership, maintenance, use or entrustment to others of any aircraft, "auto" or watercraft owned or operated by or rented or loaned to any insured. Use includes operation and "loading or unloading".

This exclusion applies even if the claims against any insured allege negligence or other wrongdoing in the supervision, hiring, employment, training or monitoring of others by that insured, if the "occurrence" which caused the "bodily injury" or "property damage" involved the ownership, maintenance, use or entrustment to others of any aircraft, "auto" or watercraft that is owned or operated by or rented or loaned to any insured.

This exclusion does not apply to:

(1) A watercraft while ashore on premises you own or rent;

(2) A watercraft you do not own that is:

(a) Less than 26 feet long; and

(b) Not being used to carry persons or property for a charge;

(3) Parking an "auto" on, or on the ways next to, premises you own or rent, provided the "auto" is not owned by or rented or loaned to you or the insured;

(4) Liability assumed under any "insured contract" for the ownership, maintenance or use of aircraft or watercraft; or

(5) "Bodily injury" or "property damage" arising out of:

(a) The operation of machinery or equipment that is attached to, or part of, a land vehicle that would qualify under the definition of "mobile equipment" if it were not subject to a compulsory or financial responsibility law or other motor vehicle insurance law where it is licensed or principally garaged; or

(b) The operation of any of the machinery or equipment listed in Paragraph **f.(2)** or **f.(3)** of the definition of "mobile equipment".

h. Mobile Equipment

"Bodily injury" or "property damage" arising out of:

(1) The transportation of "mobile equipment" by an "auto" owned or operated by or rented or loaned to any insured; or

(2) The use of "mobile equipment" in, or while in practice for, or while being prepared for, any prearranged racing, speed, demolition, or stunting activity.

i. War

"Bodily injury" or "property damage", however caused, arising, directly or indirectly, out of:

(1) War, including undeclared or civil war;

(2) Warlike action by a military force, including action in hindering or defending against an actual or expected attack, by any government, sovereign or other authority using military personnel or other agents; or

(3) Insurrection, rebellion, revolution, usurped power, or action taken by governmental authority in hindering or defending against any of these.

j. Damage To Property

"Property damage" to:

(1) Property you own, rent, or occupy, including any costs or expenses incurred by you, or any other person, organization or entity, for repair, replacement, enhancement, restoration or maintenance of such property for any reason, including prevention of injury to a person or damage to another's property;

(2) Premises you sell, give away or abandon, if the "property damage" arises out of any part of those premises;

(3) Property loaned to you;

SAMPLE

(4) Personal property in the care, custody or control of the insured;

(5) That particular part of real property on which you or any contractors or subcontractors working directly or indirectly on your behalf are performing operations, if the "property damage" arises out of those operations; or

(6) That particular part of any property that must be restored, repaired or replaced because "your work" was incorrectly performed on it.

Paragraphs **(1), (3)** and **(4)** of this exclusion do not apply to "property damage" (other than damage by fire) to premises, including the contents of such premises, rented to you for a period of seven or fewer consecutive days. A separate limit of insurance applies to Damage To Premises Rented To You as described in Section **III** – Limits Of Insurance.

Paragraph **(2)** of this exclusion does not apply if the premises are "your work" and were never occupied, rented or held for rental by you.

Paragraphs **(3), (4), (5)** and **(6)** of this exclusion do not apply to liability assumed under a sidetrack agreement.

Paragraph **(6)** of this exclusion does not apply to "property damage" included in the "products-completed operations hazard".

k. Damage To Your Product

"Property damage" to "your product" arising out of it or any part of it.

l. Damage To Your Work

"Property damage" to "your work" arising out of it or any part of it and included in the "products-completed operations hazard".

This exclusion does not apply if the damaged work or the work out of which the damage arises was performed on your behalf by a subcontractor.

m. Damage To Impaired Property Or Property Not Physically Injured

"Property damage" to "impaired property" or property that has not been physically injured, arising out of:

(1) A defect, deficiency, inadequacy or dangerous condition in "your product" or "your work"; or

(2) A delay or failure by you or anyone acting on your behalf to perform a contract or agreement in accordance with its terms.

This exclusion does not apply to the loss of use of other property arising out of sudden and accidental physical injury to "your product" or "your work" after it has been put to its intended use.

n. Recall Of Products, Work Or Impaired Property

Damages claimed for any loss, cost or expense incurred by you or others for the loss of use, withdrawal, recall, inspection, repair, replacement, adjustment, removal or disposal of:

(1) "Your product";

(2) "Your work"; or

(3) "Impaired property";

if such product, work, or property is withdrawn or recalled from the market or from use by any person or organization because of a known or suspected defect, deficiency, inadequacy or dangerous condition in it.

o. Personal And Advertising Injury

"Bodily injury" arising out of "personal and advertising injury".

p. Electronic Data

Damages arising out of the loss of, loss of use of, damage to, corruption of, inability to access, or inability to manipulate electronic data.

However, this exclusion does not apply to liability for damages because of "bodily injury".

As used in this exclusion, electronic data means information, facts or programs stored as or on, created or used on, or transmitted to or from computer software, including systems and applications software, hard or floppy disks, CD-ROMs, tapes, drives, cells, data processing devices or any other media which are used with electronically controlled equipment.

q. Recording And Distribution Of Material Or Information In Violation Of Law

"Bodily injury" or "property damage" arising directly or indirectly out of any action or omission that violates or is alleged to violate:

(1) The Telephone Consumer Protection Act (TCPA), including any amendment of or addition to such law;

(2) The CAN-SPAM Act of 2003, including any amendment of or addition to such law;

(3) The Fair Credit Reporting Act (FCRA), and any amendment of or addition to such law, including the Fair and Accurate Credit Transactions Act (FACTA); or

SAMPLE

(4) Any federal, state or local statute, ordinance or regulation, other than the TCPA, CAN-SPAM Act of 2003 or FCRA and their amendments and additions, that addresses, prohibits, or limits the printing, dissemination, disposal, collecting, recording, sending, transmitting, communicating or distribution of material or information.

Exclusions **c.** through **n.** do not apply to damage by fire to premises while rented to you or temporarily occupied by you with permission of the owner. A separate limit of insurance applies to this coverage as described in Section **III** – Limits Of Insurance.

COVERAGE B – PERSONAL AND ADVERTISING INJURY LIABILITY

1. Insuring Agreement

a. We will pay those sums that the insured becomes legally obligated to pay as damages because of "personal and advertising injury" to which this insurance applies. We will have the right and duty to defend the insured against any "suit" seeking those damages. However, we will have no duty to defend the insured against any "suit" seeking damages for "personal and advertising injury" to which this insurance does not apply. We may, at our discretion, investigate any offense and settle any claim or "suit" that may result. But:

(1) The amount we will pay for damages is limited as described in Section **III** – Limits Of Insurance; and

(2) Our right and duty to defend end when we have used up the applicable limit of insurance in the payment of judgments or settlements under Coverages **A** or **B** or medical expenses under Coverage **C.**

No other obligation or liability to pay sums or perform acts or services is covered unless explicitly provided for under Supplementary Payments – Coverages **A** and **B.**

b. This insurance applies to "personal and advertising injury" caused by an offense arising out of your business but only if the offense was committed in the "coverage territory" during the policy period.

2. Exclusions

This insurance does not apply to:

a. Knowing Violation Of Rights Of Another

"Personal and advertising injury" caused by or at the direction of the insured with the knowledge that the act would violate the rights of another and would inflict "personal and advertising injury".

b. Material Published With Knowledge Of Falsity

"Personal and advertising injury" arising out of oral or written publication, in any manner, of material, if done by or at the direction of the insured with knowledge of its falsity.

c. Material Published Prior To Policy Period

"Personal and advertising injury" arising out of oral or written publication, in any manner, of material whose first publication took place before the beginning of the policy period.

d. Criminal Acts

"Personal and advertising injury" arising out of a criminal act committed by or at the direction of the insured.

e. Contractual Liability

"Personal and advertising injury" for which the insured has assumed liability in a contract or agreement. This exclusion does not apply to liability for damages that the insured would have in the absence of the contract or agreement.

f. Breach Of Contract

"Personal and advertising injury" arising out of a breach of contract, except an implied contract to use another's advertising idea in your "advertisement".

g. Quality Or Performance Of Goods – Failure To Conform To Statements

"Personal and advertising injury" arising out of the failure of goods, products or services to conform with any statement of quality or performance made in your "advertisement".

h. Wrong Description Of Prices

"Personal and advertising injury" arising out of the wrong description of the price of goods, products or services stated in your "advertisement".

SAMPLE

i. Infringement Of Copyright, Patent, Trademark Or Trade Secret

"Personal and advertising injury" arising out of the infringement of copyright, patent, trademark, trade secret or other intellectual property rights. Under this exclusion, such other intellectual property rights do not include the use of another's advertising idea in your "advertisement".

However, this exclusion does not apply to infringement, in your "advertisement", of copyright, trade dress or slogan.

j. Insureds In Media And Internet Type Businesses

"Personal and advertising injury" committed by an insured whose business is:

(1) Advertising, broadcasting, publishing or telecasting;

(2) Designing or determining content of web sites for others; or

(3) An Internet search, access, content or service provider.

However, this exclusion does not apply to Paragraphs **14.a., b.** and **c.** of "personal and advertising injury" under the Definitions section.

For the purposes of this exclusion, the placing of frames, borders or links, or advertising, for you or others anywhere on the Internet, is not by itself, considered the business of advertising, broadcasting, publishing or telecasting.

k. Electronic Chatrooms Or Bulletin Boards

"Personal and advertising injury" arising out of an electronic chatroom or bulletin board the insured hosts, owns, or over which the insured exercises control.

l. Unauthorized Use Of Another's Name Or Product

"Personal and advertising injury" arising out of the unauthorized use of another's name or product in your e-mail address, domain name or metatag, or any other similar tactics to mislead another's potential customers.

m. Pollution

"Personal and advertising injury" arising out of the actual, alleged or threatened discharge, dispersal, seepage, migration, release or escape of "pollutants" at any time.

n. Pollution-related

Any loss, cost or expense arising out of any:

(1) Request, demand, order or statutory or regulatory requirement that any insured or others test for, monitor, clean up, remove, contain, treat, detoxify or neutralize, or in any way respond to, or assess the effects of, "pollutants"; or

(2) Claim or suit by or on behalf of a governmental authority for damages because of testing for, monitoring, cleaning up, removing, containing, treating, detoxifying or neutralizing, or in any way responding to, or assessing the effects of, "pollutants".

o. War

"Personal and advertising injury", however caused, arising, directly or indirectly, out of:

(1) War, including undeclared or civil war;

(2) Warlike action by a military force, including action in hindering or defending against an actual or expected attack, by any government, sovereign or other authority using military personnel or other agents; or

(3) Insurrection, rebellion, revolution, usurped power, or action taken by governmental authority in hindering or defending against any of these.

p. Recording And Distribution Of Material Or Information In Violation Of Law

"Personal and advertising injury" arising directly or indirectly out of any action or omission that violates or is alleged to violate:

(1) The Telephone Consumer Protection Act (TCPA), including any amendment of or addition to such law;

(2) The CAN-SPAM Act of 2003, including any amendment of or addition to such law;

(3) The Fair Credit Reporting Act (FCRA), and any amendment of or addition to such law, including the Fair and Accurate Credit Transactions Act (FACTA); or

(4) Any federal, state or local statute, ordinance or regulation, other than the TCPA, CAN-SPAM Act of 2003 or FCRA and their amendments and additions, that addresses, prohibits, or limits the printing, dissemination, disposal, collecting, recording, sending, transmitting, communicating or distribution of material or information.

SAMPLE

Reproduction of Insurance Services Office, Inc. Form

COVERAGE C – MEDICAL PAYMENTS

1. Insuring Agreement

a. We will pay medical expenses as described below for "bodily injury" caused by an accident:

(1) On premises you own or rent;

(2) On ways next to premises you own or rent; or

(3) Because of your operations;

provided that:

(a) The accident takes place in the "coverage territory" and during the policy period;

(b) The expenses are incurred and reported to us within one year of the date of the accident; and

(c) The injured person submits to examination, at our expense, by physicians of our choice as often as we reasonably require.

b. We will make these payments regardless of fault. These payments will not exceed the applicable limit of insurance. We will pay reasonable expenses for:

(1) First aid administered at the time of an accident;

(2) Necessary medical, surgical, X-ray and dental services, including prosthetic devices; and

(3) Necessary ambulance, hospital, professional nursing and funeral services.

2. Exclusions

We will not pay expenses for "bodily injury":

a. Any Insured

To any insured, except "volunteer workers".

b. Hired Person

To a person hired to do work for or on behalf of any insured or a tenant of any insured.

c. Injury On Normally Occupied Premises

To a person injured on that part of premises you own or rent that the person normally occupies.

d. Workers' Compensation And Similar Laws

To a person, whether or not an "employee" of any insured, if benefits for the "bodily injury" are payable or must be provided under a workers' compensation or disability benefits law or a similar law.

e. Athletics Activities

To a person injured while practicing, instructing or participating in any physical exercises or games, sports, or athletic contests.

f. Products-Completed Operations Hazard

Included within the "products-completed operations hazard".

g. Coverage A Exclusions

Excluded under Coverage A.

SUPPLEMENTARY PAYMENTS – COVERAGES A AND B

1. We will pay, with respect to any claim we investigate or settle, or any "suit" against an insured we defend:

a. All expenses we incur.

b. Up to $250 for cost of bail bonds required because of accidents or traffic law violations arising out of the use of any vehicle to which the Bodily Injury Liability Coverage applies. We do not have to furnish these bonds.

c. The cost of bonds to release attachments, but only for bond amounts within the applicable limit of insurance. We do not have to furnish these bonds.

d. All reasonable expenses incurred by the insured at our request to assist us in the investigation or defense of the claim or "suit", including actual loss of earnings up to $250 a day because of time off from work.

e. All court costs taxed against the insured in the "suit". However, these payments do not include attorneys' fees or attorneys' expenses taxed against the insured.

f. Prejudgment interest awarded against the insured on that part of the judgment we pay. If we make an offer to pay the applicable limit of insurance, we will not pay any prejudgment interest based on that period of time after the offer.

SAMPLE

g. All interest on the full amount of any judgment that accrues after entry of the judgment and before we have paid, offered to pay, or deposited in court the part of the judgment that is within the applicable limit of insurance.

These payments will not reduce the limits of insurance.

2. If we defend an insured against a "suit" and an indemnitee of the insured is also named as a party to the "suit", we will defend that indemnitee if all of the following conditions are met:

a. The "suit" against the indemnitee seeks damages for which the insured has assumed the liability of the indemnitee in a contract or agreement that is an "insured contract";

b. This insurance applies to such liability assumed by the insured;

c. The obligation to defend, or the cost of the defense of, that indemnitee, has also been assumed by the insured in the same "insured contract";

d. The allegations in the "suit" and the information we know about the "occurrence" are such that no conflict appears to exist between the interests of the insured and the interests of the indemnitee;

e. The indemnitee and the insured ask us to conduct and control the defense of that indemnitee against such "suit" and agree that we can assign the same counsel to defend the insured and the indemnitee; and

f. The indemnitee:

(1) Agrees in writing to:

(a) Cooperate with us in the investigation, settlement or defense of the "suit";

(b) Immediately send us copies of any demands, notices, summonses or legal papers received in connection with the "suit";

(c) Notify any other insurer whose coverage is available to the indemnitee; and

(d) Cooperate with us with respect to coordinating other applicable insurance available to the indemnitee; and

(2) Provides us with written authorization to:

(a) Obtain records and other information related to the "suit"; and

(b) Conduct and control the defense of the indemnitee in such "suit".

So long as the above conditions are met, attorneys' fees incurred by us in the defense of that indemnitee, necessary litigation expenses incurred by us and necessary litigation expenses incurred by the indemnitee at our request will be paid as Supplementary Payments. Notwithstanding the provisions of Paragraph **2.b.(2)** of Section **I** – Coverage **A** – Bodily Injury And Property Damage Liability, such payments will not be deemed to be damages for "bodily injury" and "property damage" and will not reduce the limits of insurance.

Our obligation to defend an insured's indemnitee and to pay for attorneys' fees and necessary litigation expenses as Supplementary Payments ends when we have used up the applicable limit of insurance in the payment of judgments or settlements or the conditions set forth above, or the terms of the agreement described in Paragraph **f.** above, are no longer met.

SECTION II -- WHO IS AN INSURED

1. If you are designated in the Declarations as:

a. An individual, you and your spouse are insureds, but only with respect to the conduct of a business of which you are the sole owner.

b. A partnership or joint venture, you are an insured. Your members, your partners, and their spouses are also insureds, but only with respect to the conduct of your business.

c. A limited liability company, you are an insured. Your members are also insureds, but only with respect to the conduct of your business. Your managers are insureds, but only with respect to their duties as your managers.

d. An organization other than a partnership, joint venture or limited liability company, you are an insured. Your "executive officers" and directors are insureds, but only with respect to their duties as your officers or directors. Your stockholders are also insureds, but only with respect to their liability as stockholders.

e. A trust, you are an insured. Your trustees are also insureds, but only with respect to their duties as trustees.

SAMPLE

2. Each of the following is also an insured:

a. Your "volunteer workers" only while performing duties related to the conduct of your business, or your "employees", other than either your "executive officers" (if you are an organization other than a partnership, joint venture or limited liability company) or your managers (if you are a limited liability company), but only for acts within the scope of their employment by you or while performing duties related to the conduct of your business. However, none of these "employees" or "volunteer workers" are insureds for:

(1) "Bodily injury" or "personal and advertising injury":

(a) To you, to your partners or members (if you are a partnership or joint venture), to your members (if you are a limited liability company), to a co-"employee" while in the course of his or her employment or performing duties related to the conduct of your business, or to your other "volunteer workers" while performing duties related to the conduct of your business;

(b) To the spouse, child, parent, brother or sister of that co-"employee" or "volunteer worker" as a consequence of Paragraph **(1)(a)** above;

(c) For which there is any obligation to share damages with or repay someone else who must pay damages because of the injury described in Paragraph **(1)(a)** or **(b)** above; or

(d) Arising out of his or her providing or failing to provide professional health care services.

(2) "Property damage" to property:

(a) Owned, occupied or used by;

(b) Rented to, in the care, custody or control of, or over which physical control is being exercised for any purpose by;

you, any of your "employees", "volunteer workers", any partner or member (if you are a partnership or joint venture), or any member (if you are a limited liability company).

b. Any person (other than your "employee" or "volunteer worker"), or any organization while acting as your real estate manager.

c. Any person or organization having proper temporary custody of your property if you die, but only:

(1) With respect to liability arising out of the maintenance or use of that property; and

(2) Until your legal representative has been appointed.

d. Your legal representative if you die, but only with respect to duties as such. That representative will have all your rights and duties under this Coverage Part.

3. Any organization you newly acquire or form, other than a partnership, joint venture or limited liability company, and over which you maintain ownership or majority interest, will qualify as a Named Insured if there is no other similar insurance available to that organization. However:

a. Coverage under this provision is afforded only until the 90th day after you acquire or form the organization or the end of the policy period, whichever is earlier;

b. Coverage **A** does not apply to "bodily injury" or "property damage" that occurred before you acquired or formed the organization; and

c. Coverage **B** does not apply to "personal and advertising injury" arising out of an offense committed before you acquired or formed the organization.

No person or organization is an insured with respect to the conduct of any current or past partnership, joint venture or limited liability company that is not shown as a Named Insured in the Declarations.

SECTION III – LIMITS OF INSURANCE

1. The Limits of Insurance shown in the Declarations and the rules below fix the most we will pay regardless of the number of:

a. Insureds;

b. Claims made or "suits" brought; or

c. Persons or organizations making claims or bringing "suits".

2. The General Aggregate Limit is the most we will pay for the sum of:

a. Medical expenses under Coverage **C;**

b. Damages under Coverage **A,** except damages because of "bodily injury" or "property damage" included in the "products-completed operations hazard"; and

c. Damages under Coverage **B.**

SAMPLE

Reproduction of Insurance Services Office, Inc. Form

3. The Products-Completed Operations Aggregate Limit is the most we will pay under Coverage **A** for damages because of "bodily injury" and "property damage" included in the "products-completed operations hazard".
4. Subject to Paragraph **2.** above, the Personal And Advertising Injury Limit is the most we will pay under Coverage **B** for the sum of all damages because of all "personal and advertising injury" sustained by any one person or organization.
5. Subject to Paragraph **2.** or **3.** above, whichever applies, the Each Occurrence Limit is the most we will pay for the sum of:
   a. Damages under Coverage **A;** and
   b. Medical expenses under Coverage **C**

   because of all "bodily injury" and "property damage" arising out of any one "occurrence".
6. Subject to Paragraph **5.** above, the Damage To Premises Rented To You Limit is the most we will pay under Coverage **A** for damages because of "property damage" to any one premises, while rented to you, or in the case of damage by fire, while rented to you or temporarily occupied by you with permission of the owner.
7. Subject to Paragraph **5.** above, the Medical Expense Limit is the most we will pay under Coverage **C** for all medical expenses because of "bodily injury" sustained by any one person.

The Limits of Insurance of this Coverage Part apply separately to each consecutive annual period and to any remaining period of less than 12 months, starting with the beginning of the policy period shown in the Declarations, unless the policy period is extended after issuance for an additional period of less than 12 months. In that case, the additional period will be deemed part of the last preceding period for purposes of determining the Limits of Insurance.

SECTION IV – COMMERCIAL GENERAL LIABILITY CONDITIONS

1. **Bankruptcy**

   Bankruptcy or insolvency of the insured or of the insured's estate will not relieve us of our obligations under this Coverage Part.
2. **Duties In The Event Of Occurrence, Offense, Claim Or Suit**
   a. You must see to it that we are notified as soon as practicable of an "occurrence" or an offense which may result in a claim. To the extent possible, notice should include:
      (1) How, when and where the "occurrence" or offense took place;
      (2) The names and addresses of any injured persons and witnesses; and
      (3) The nature and location of any injury or damage arising out of the "occurrence" or offense.
   b. If a claim is made or "suit" is brought against any insured, you must:
      (1) Immediately record the specifics of the claim or "suit" and the date received; and
      (2) Notify us as soon as practicable.

      You must see to it that we receive written notice of the claim or "suit" as soon as practicable.
   c. You and any other involved insured must:
      (1) Immediately send us copies of any demands, notices, summonses or legal papers received in connection with the claim or "suit";
      (2) Authorize us to obtain records and other information;
      (3) Cooperate with us in the investigation or settlement of the claim or defense against the "suit"; and
      (4) Assist us, upon our request, in the enforcement of any right against any person or organization which may be liable to the insured because of injury or damage to which this insurance may also apply.
   d. No insured will, except at that insured's own cost, voluntarily make a payment, assume any obligation, or incur any expense, other than for first aid, without our consent.
3. **Legal Action Against Us**

   No person or organization has a right under this Coverage Part:
   a. To join us as a party or otherwise bring us into a "suit" asking for damages from an insured; or
   b. To sue us on this Coverage Part unless all of its terms have been fully complied with.

   A person or organization may sue us to recover on an agreed settlement or on a final judgment against an insured; but we will not be liable for damages that are not payable under the terms of this Coverage Part or that are in excess of the applicable limit of insurance. An agreed settlement means a settlement and release of liability signed by us, the insured and the claimant or the claimant's legal representative.

SAMPLE

4. Other Insurance

If other valid and collectible insurance is available to the insured for a loss we cover under Coverages **A** or **B** of this Coverage Part, our obligations are limited as follows:

a. Primary Insurance

This insurance is primary except when Paragraph **b.** below applies. If this insurance is primary, our obligations are not affected unless any of the other insurance is also primary. Then, we will share with all that other insurance by the method described in Paragraph **c.** below.

b. Excess Insurance

(1) This insurance is excess over:

(a) Any of the other insurance, whether primary, excess, contingent or on any other basis:

(i) That is Fire, Extended Coverage, Builder's Risk, Installation Risk or similar coverage for "your work";

(ii) That is Fire insurance for premises rented to you or temporarily occupied by you with permission of the owner;

(iii) That is insurance purchased by you to cover your liability as a tenant for "property damage" to premises rented to you or temporarily occupied by you with permission of the owner; or

(iv) If the loss arises out of the maintenance or use of aircraft, "autos" or watercraft to the extent not subject to Exclusion **g.** of Section **I** – Coverage **A** – Bodily Injury And Property Damage Liability.

(b) Any other primary insurance available to you covering liability for damages arising out of the premises or operations, or the products and completed operations, for which you have been added as an additional insured.

(2) When this insurance is excess, we will have no duty under Coverages **A** or **B** to defend the insured against any "suit" if any other insurer has a duty to defend the insured against that "suit". If no other insurer defends, we will undertake to do so, but we will be entitled to the insured's rights against all those other insurers.

(3) When this insurance is excess over other insurance, we will pay only our share of the amount of the loss, if any, that exceeds the sum of:

(a) The total amount that all such other insurance would pay for the loss in the absence of this insurance; and

(b) The total of all deductible and self-insured amounts under all that other insurance.

(4) We will share the remaining loss, if any, with any other insurance that is not described in this Excess Insurance provision and was not bought specifically to apply in excess of the Limits of Insurance shown in the Declarations of this Coverage Part.

c. Method Of Sharing

If all of the other insurance permits contribution by equal shares, we will follow this method also. Under this approach each insurer contributes equal amounts until it has paid its applicable limit of insurance or none of the loss remains, whichever comes first.

If any of the other insurance does not permit contribution by equal shares, we will contribute by limits. Under this method, each insurer's share is based on the ratio of its applicable limit of insurance to the total applicable limits of insurance of all insurers.

5. Premium Audit

a. We will compute all premiums for this Coverage Part in accordance with our rules and rates.

b. Premium shown in this Coverage Part as advance premium is a deposit premium only. At the close of each audit period we will compute the earned premium for that period and send notice to the first Named Insured. The due date for audit and retrospective premiums is the date shown as the due date on the bill. If the sum of the advance and audit premiums paid for the policy period is greater than the earned premium, we will return the excess to the first Named Insured.

c. The first Named Insured must keep records of the information we need for premium computation, and send us copies at such times as we may request.

6. Representations

By accepting this policy, you agree:

a. The statements in the Declarations are accurate and complete;

SAMPLE

b. Those statements are based upon representations you made to us; and

c. We have issued this policy in reliance upon your representations.

7. Separation Of Insureds

Except with respect to the Limits of Insurance, and any rights or duties specifically assigned in this Coverage Part to the first Named Insured, this insurance applies:

a. As if each Named Insured were the only Named Insured; and

b. Separately to each insured against whom claim is made or "suit" is brought.

8. Transfer Of Rights Of Recovery Against Others To Us

If the insured has rights to recover all or part of any payment we have made under this Coverage Part, those rights are transferred to us. The insured must do nothing after loss to impair them. At our request, the insured will bring "suit" or transfer those rights to us and help us enforce them.

9. When We Do Not Renew

If we decide not to renew this Coverage Part, we will mail or deliver to the first Named Insured shown in the Declarations written notice of the nonrenewal not less than 30 days before the expiration date.

If notice is mailed, proof of mailing will be sufficient proof of notice.

SECTION V – DEFINITIONS

1. "Advertisement" means a notice that is broadcast or published to the general public or specific market segments about your goods, products or services for the purpose of attracting customers or supporters. For the purposes of this definition:

a. Notices that are published include material placed on the Internet or on similar electronic means of communication; and

b. Regarding web sites, only that part of a web site that is about your goods, products or services for the purposes of attracting customers or supporters is considered an advertisement.

2. "Auto" means:

a. A land motor vehicle, trailer or semitrailer designed for travel on public roads, including any attached machinery or equipment; or

b. Any other land vehicle that is subject to a compulsory or financial responsibility law or other motor vehicle insurance law where it is licensed or principally garaged.

However, "auto" does not include "mobile equipment".

3. "Bodily injury" means bodily injury, sickness or disease sustained by a person, including death resulting from any of these at any time.

4. "Coverage territory" means:

a. The United States of America (including its territories and possessions), Puerto Rico and Canada;

b. International waters or airspace, but only if the injury or damage occurs in the course of travel or transportation between any places included in Paragraph **a.** above; or

c. All other parts of the world if the injury or damage arises out of:

(1) Goods or products made or sold by you in the territory described in Paragraph **a.** above;

(2) The activities of a person whose home is in the territory described in Paragraph **a.** above, but is away for a short time on your business; or

(3) "Personal and advertising injury" offenses that take place through the Internet or similar electronic means of communication;

provided the insured's responsibility to pay damages is determined in a "suit" on the merits, in the territory described in Paragraph **a.** above or in a settlement we agree to.

5. "Employee" includes a "leased worker". "Employee" does not include a "temporary worker".

6. "Executive officer" means a person holding any of the officer positions created by your charter, constitution, bylaws or any other similar governing document.

7. "Hostile fire" means one which becomes uncontrollable or breaks out from where it was intended to be.

8. "Impaired property" means tangible property, other than "your product" or "your work", that cannot be used or is less useful because:

a. It incorporates "your product" or "your work" that is known or thought to be defective, deficient, inadequate or dangerous; or

b. You have failed to fulfill the terms of a contract or agreement;

if such property can be restored to use by the repair, replacement, adjustment or removal of "your product" or "your work" or your fulfilling the terms of the contract or agreement.

SAMPLE

9. "Insured contract" means:

a. A contract for a lease of premises. However, that portion of the contract for a lease of premises that indemnifies any person or organization for damage by fire to premises while rented to you or temporarily occupied by you with permission of the owner is not an "insured contract";

b. A sidetrack agreement;

c. Any easement or license agreement, except in connection with construction or demolition operations on or within 50 feet of a railroad;

d. An obligation, as required by ordinance, to indemnify a municipality, except in connection with work for a municipality;

e. An elevator maintenance agreement;

f. That part of any other contract or agreement pertaining to your business (including an indemnification of a municipality in connection with work performed for a municipality) under which you assume the tort liability of another party to pay for "bodily injury" or "property damage" to a third person or organization. Tort liability means a liability that would be imposed by law in the absence of any contract or agreement.

Paragraph **f.** does not include that part of any contract or agreement:

(1) That indemnifies a railroad for "bodily injury" or "property damage" arising out of construction or demolition operations, within 50 feet of any railroad property and affecting any railroad bridge or trestle, tracks, road-beds, tunnel, underpass or crossing;

(2) That indemnifies an architect, engineer or surveyor for injury or damage arising out of:

(a) Preparing, approving, or failing to prepare or approve, maps, shop drawings, opinions, reports, surveys, field orders, change orders or drawings and specifications; or

(b) Giving directions or instructions, or failing to give them, if that is the primary cause of the injury or damage; or

(3) Under which the insured, if an architect, engineer or surveyor, assumes liability for an injury or damage arising out of the insured's rendering or failure to render professional services, including those listed in **(2)** above and supervisory, inspection, architectural or engineering activities.

10. "Leased worker" means a person leased to you by a labor leasing firm under an agreement between you and the labor leasing firm, to perform duties related to the conduct of your business. "Leased worker" does not include a "temporary worker".

11. "Loading or unloading" means the handling of property:

a. After it is moved from the place where it is accepted for movement into or onto an aircraft, watercraft or "auto";

b. While it is in or on an aircraft, watercraft or "auto"; or

c. While it is being moved from an aircraft, watercraft or "auto" to the place where it is finally delivered;

but "loading or unloading" does not include the movement of property by means of a mechanical device, other than a hand truck, that is not attached to the aircraft, watercraft or "auto".

12. "Mobile equipment" means any of the following types of land vehicles, including any attached machinery or equipment:

a. Bulldozers, farm machinery, forklifts and other vehicles designed for use principally off public roads;

b. Vehicles maintained for use solely on or next to premises you own or rent;

c. Vehicles that travel on crawler treads;

d. Vehicles, whether self-propelled or not, maintained primarily to provide mobility to permanently mounted:

(1) Power cranes, shovels, loaders, diggers or drills; or

(2) Road construction or resurfacing equipment such as graders, scrapers or rollers;

e. Vehicles not described in Paragraph **a., b., c.** or **d.** above that are not self-propelled and are maintained primarily to provide mobility to permanently attached equipment of the following types:

(1) Air compressors, pumps and generators, including spraying, welding, building cleaning, geophysical exploration, lighting and well servicing equipment; or

(2) Cherry pickers and similar devices used to raise or lower workers;

f. Vehicles not described in Paragraph **a., b., c.** or **d.** above maintained primarily for purposes other than the transportation of persons or cargo.

SAMPLE

However, self-propelled vehicles with the following types of permanently attached equipment are not "mobile equipment" but will be considered "autos":

(1) Equipment designed primarily for:

(a) Snow removal;

(b) Road maintenance, but not construction or resurfacing; or

(c) Street cleaning;

(2) Cherry pickers and similar devices mounted on automobile or truck chassis and used to raise or lower workers; and

(3) Air compressors, pumps and generators, including spraying, welding, building cleaning, geophysical exploration, lighting and well servicing equipment.

However, "mobile equipment" does not include any land vehicles that are subject to a compulsory or financial responsibility law or other motor vehicle insurance law where it is licensed or principally garaged. Land vehicles subject to a compulsory or financial responsibility law or other motor vehicle insurance law are considered "autos".

13. "Occurrence" means an accident, including continuous or repeated exposure to substantially the same general harmful conditions.

14. "Personal and advertising injury" means injury, including consequential "bodily injury", arising out of one or more of the following offenses:

a. False arrest, detention or imprisonment;

b. Malicious prosecution;

c. The wrongful eviction from, wrongful entry into, or invasion of the right of private occupancy of a room, dwelling or premises that a person occupies, committed by or on behalf of its owner, landlord or lessor;

d. Oral or written publication, in any manner, of material that slanders or libels a person or organization or disparages a person's or organization's goods, products or services;

e. Oral or written publication, in any manner, of material that violates a person's right of privacy;

f. The use of another's advertising idea in your "advertisement"; or

g. Infringing upon another's copyright, trade dress or slogan in your "advertisement".

15. "Pollutants" mean any solid, liquid, gaseous or thermal irritant or contaminant, including smoke, vapor, soot, fumes, acids, alkalis, chemicals and waste. Waste includes materials to be recycled, reconditioned or reclaimed.

16. "Products-completed operations hazard":

a. Includes all "bodily injury" and "property damage" occurring away from premises you own or rent and arising out of "your product" or "your work" except:

(1) Products that are still in your physical possession; or

(2) Work that has not yet been completed or abandoned. However, "your work" will be deemed completed at the earliest of the following times:

(a) When all of the work called for in your contract has been completed.

(b) When all of the work to be done at the job site has been completed if your contract calls for work at more than one job site.

(c) When that part of the work done at a job site has been put to its intended use by any person or organization other than another contractor or subcontractor working on the same project.

Work that may need service, maintenance, correction, repair or replacement, but which is otherwise complete, will be treated as completed.

b. Does not include "bodily injury" or "property damage" arising out of:

(1) The transportation of property, unless the injury or damage arises out of a condition in or on a vehicle not owned or operated by you, and that condition was created by the "loading or unloading" of that vehicle by any insured;

(2) The existence of tools, uninstalled equipment or abandoned or unused materials; or

(3) Products or operations for which the classification, listed in the Declarations or in a policy Schedule, states that products-completed operations are subject to the General Aggregate Limit.

17. "Property damage" means:

a. Physical injury to tangible property, including all resulting loss of use of that property. All such loss of use shall be deemed to occur at the time of the physical injury that caused it; or

b. Loss of use of tangible property that is not physically injured. All such loss of use shall be deemed to occur at the time of the "occurrence" that caused it.

For the purposes of this insurance, electronic data is not tangible property.

SAMPLE

As used in this definition, electronic data means information, facts or programs stored as or on, created or used on, or transmitted to or from computer software, including systems and applications software, hard or floppy disks, CD-ROMs, tapes, drives, cells, data processing devices or any other media which are used with electronically controlled equipment.

18. "Suit" means a civil proceeding in which damages because of "bodily injury", "property damage" or "personal and advertising injury" to which this insurance applies are alleged. "Suit" includes:

a. An arbitration proceeding in which such damages are claimed and to which the insured must submit or does submit with our consent; or

b. Any other alternative dispute resolution proceeding in which such damages are claimed and to which the insured submits with our consent.

19. "Temporary worker" means a person who is furnished to you to substitute for a permanent "employee" on leave or to meet seasonal or short-term workload conditions.

20. "Volunteer worker" means a person who is not your "employee", and who donates his or her work and acts at the direction of and within the scope of duties determined by you, and is not paid a fee, salary or other compensation by you or anyone else for their work performed for you.

21. "Your product":

a. Means:

(1) Any goods or products, other than real property, manufactured, sold, handled, distributed or disposed of by:

(a) You;

(b) Others trading under your name; or

(c) A person or organization whose business or assets you have acquired; and

(2) Containers (other than vehicles), materials, parts or equipment furnished in connection with such goods or products.

b. Includes:

(1) Warranties or representations made at any time with respect to the fitness, quality, durability, performance or use of "your product"; and

(2) The providing of or failure to provide warnings or instructions.

c. Does not include vending machines or other property rented to or located for the use of others but not sold.

22. "Your work":

a. Means:

(1) Work or operations performed by you or on your behalf; and

(2) Materials, parts or equipment furnished in connection with such work or operations.

b. Includes:

(1) Warranties or representations made at any time with respect to the fitness, quality, durability, performance or use of "your work"; and

(2) The providing of or failure to provide warnings or instructions.

SAMPLE

MCS-90: Motor Carrier Public Liability

FORM MCS-90 Revised 01/05/2017 **OMB No.: 2126-0008 Expiration: 01/31/2020**

USDOT Number: _____ **Date Received:** _____

A Federal Agency may not conduct or sponsor, and a person is not required to respond to, nor shall a person be subject to a penalty for failure to comply with a collection of information subject to the requirements of the Paperwork Reduction Act unless that collection of information displays a current valid OMB Control Number. The OMB Control Number for this information collection is 2126-0008. Public reporting for this collection of information is estimated to be approximately 2 minutes per response, including the time for reviewing instructions, gathering the data needed, and completing and reviewing the collection of information. All responses to this collection of information are mandatory. Send comments regarding this burden estimate or any other aspect of this collection of information, including suggestions for reducing this burden to: Information Collection Clearance Officer, Federal Motor Carrier Safety Administration, MC-RRA, Washington, D.C. 20590.

United States Department of Transportation
Federal Motor Carrier Safety Administration

Endorsement for Motor Carrier Policies of Insurance for Public Liability under Sections 29 and 30 of the Motor Carrier Act of 1980

FORM MCS-90

Issued to _____ **of** _____
(Motor Carrier name) *(Motor Carrier state or province)*

Dated at _____ **on this** _____ **day of** _____, _____

Amending Policy Number: _____ **Effective Date:** _____

Name of Insurance Company: _____

Countersigned by: _____
(authorized company representative)

The policy to which this endorsement is attached provides primary or excess insurance, as indicated for the limits shown *(check only one)*:

- ○ *This insurance is primary and the company shall not be liable for amounts in excess of $* _____ *for each accident.*
- ○ *This insurance is excess and the company shall not be liable for amounts in excess of $* _____ *for each accident in excess of the underlying limit of $* _____ *for each accident.*

Whenever required by the Federal Motor Carrier Safety Administration (FMCSA), the company agrees to furnish the FMCSA a duplicate of said policy and all its endorsements. The company also agrees, upon telephone request by an authorized representative of the FMCSA, to verify that the policy is in force as of a particular date. The telephone number to call is: _____.

Cancellation of this endorsement may be effected by the company of the insured by giving (1) thirty-five (35) days notice in writing to the other party (said 35 days notice to commence from the date the notice is mailed, proof of mailing shall be sufficient proof of notice), and (2) if the insured is subject to the FMCSA's registration requirements under 49 U.S.C. 13901, by providing thirty (30) days notice to the FMCSA (said 30 days notice to commence from the date the notice is received by the FMCSA at its office in Washington, DC).

Filings must be transmitted online via the Internet at http://www.fmcsa.dot.gov/urs.

(continued on next page)

SAMPLE

MCS-90: Motor Carrier Public Liability (cont'd)

FORM MCS-90 Revised 01/05/2017 **OMB No.: 2126-0008 Expiration: 01/31/2020**

DEFINITIONS AS USED IN THIS ENDORSEMENT

Accident includes continuous or repeated exposure to conditions or which results in bodily injury, property damage, or environmental damage which the insured neither expected nor intended.

Motor Vehicle means a land vehicle, machine, truck, tractor, trailer, or semitrailer propelled or drawn by mechanical power and used on a highway for transporting property, or any combination thereof.

Bodily Injury means injury to the body, sickness, or disease to any person, including death resulting from any of these.

Property Damage means damage to or loss of use of tangible property.

Environmental Restoration means restitution for the loss, damage, or destruction of natural resources arising out of the accidental discharge, dispersal, release or escape into or upon the land, atmosphere, watercourse, or body of water, of any commodity transported by a motor carrier. This shall include the cost of removal and the cost of necessary measures taken to minimize or mitigate damage to human health, the natural environment, fish, shellfish, and wildlife.

Public Liability means liability for bodily injury, property damage, and environmental restoration.

The insurance policy to which this endorsement is attached provides automobile liability insurance and is amended to assure compliance by the insured, within the limits stated herein, as a motor carrier of property, with Sections 29 and 30 of the Motor Carrier Act of 1980 and the rules and regulations of the Federal Motor Carrier Safety Administration (FMCSA).

In consideration of the premium stated in the policy to which this endorsement is attached, the insurer (the company) agrees to pay, within the limits of liability described herein, any final judgment recovered against the insured for public liability resulting from negligence in the operation, maintenance or use of motor vehicles subject to the financial responsibility requirements of Sections 29 and 30 of the Motor Carrier Act of 1980 regardless of whether or not each motor vehicle is specifically described in the policy and whether or not such negligence occurs on any route or in any territory authorized to be served by the insured or elsewhere. Such insurance as is afforded, for public liability, does not apply to injury to or death of the insured's employees while engaged in the course of their employment, or property transported by the insured, designated as cargo. It is understood and agreed that no condition, provision, stipulation, or limitation contained in the policy, this endorsement, or any other endorsement thereon, or violation thereof, shall relieve the company from liability or from the payment of any final judgment, within the limits of liability herein described, irrespective of the financial condition, insolvency or bankruptcy of the insured. However, all terms, conditions, and limitations in the policy to which the endorsement is attached shall remain in full force and effect as binding between the insured and the company. The insured agrees to reimburse the company for any payment made by the company on account of any accident, claim, or suit involving a breach of the terms of the policy, and for any payment that the company would not have been obligated to make under the provisions of the policy except for the agreement contained in this endorsement.

It is further understood and agreed that, upon failure of the company to pay any final judgment recovered against the insured as provided herein, the judgment creditor may maintain an action in any court of competent jurisdiction against the company to compel such payment.

The limits of the company's liability for the amounts prescribed in this endorsement apply separately to each accident and any payment under the policy because of anyone accident shall not operate to reduce the liability of the company for the payment of final judgments resulting from any other accident.

(continued on next page)

SAMPLE

MCS-90: Motor Carrier Public Liability (cont'd)

FORM MCS-90 Revised 01/05/2017 **OMB No.: 2126-0008 Expiration: 01/31/2020**

SCHEDULE OF LIMITS — PUBLIC LIABILITY

Type of carriage	Commodity transported	January 1, 1985
(1) For-hire (in interstate or foreign commerce, with a gross vehicle weight rating of 10,000 or more pounds).	Property (nonhazardous)	$750,000
(2) For-hire and Private (in interstate, foreign, or intrastate commerce, with a gross vehicle weight rating of 10,000 or more pounds).	Hazardous substances, as defined in 49 CFR 171.8, transported in cargo tanks, portable tanks, or hopper-type vehicles with capacities in excess of 3,500 water gallons; or in bulk Division 1.1, 1.2, and 1.3 materials, Division 2.3, Hazard Zone A, or Division 6.1, Packing Group I, Hazard Zone A material; in bulk Division 2.1 or 2.2; or highway route controlled quantities of a Class 7 material, as defined in 49 CFR 173.403.	$5,000,000
(3) For-hire and Private (in interstate or foreign commerce, in any quantity; or in intrastate commerce, in bulk only; with a gross vehicle weight rating of 10,000 or more pounds).	Oil listed in 49 CFR 172.101; hazardous waste, hazardous materials, and hazardous substances defined in 49 CFR 171.8 and listed in 49 CFR 172.101, but not mentioned in (2) above or (4) below.	$1,000,000
(4) For-hire and Private (In interstate or foreign commerce, with a gross vehicle weight rating of less than 10,000 pounds).	Any quantity of Division 1.1, 1.2, or 1.3 material; any quantity of a Division 2.3, Hazard Zone A, or Division 6.1, Packing Group I, Hazard Zone A material; or highway route controlled quantities of a Class 7 material as defined in 49 CFR 173.403.	$5,000,000

*The schedule of limits shown does not provide coverage. The limits shown in the schedule are for information purposes only.

SAMPLE

FORM MCS-90 Page 3 of 3

COMMERCIAL GENERAL LIABILITY
CG 00 35 04 13

RAILROAD PROTECTIVE LIABILITY COVERAGE FORM

Various provisions in this policy restrict coverage. Read the entire policy carefully to determine rights, duties and what is and is not covered.

Throughout this policy the words "you" and "your" refer to the Named Insured shown in the Declarations. The words "we", "us" and "our" refer to the company providing this insurance.

The word "insured" means any person or organization qualifying as such under Section **II** – Who Is An Insured.

Other words and phrases that appear in quotation marks have special meaning. Refer to Section **V** – Definitions.

SECTION I – COVERAGES

COVERAGE A – BODILY INJURY AND PROPERTY DAMAGE LIABILITY

1. Insuring Agreement

a. We will pay those sums that the insured becomes legally obligated to pay as damages because of "bodily injury" or "property damage" to which this insurance applies. We will have the right and duty to defend the insured against any "suit" seeking those damages. However, we will have no duty to defend the insured against any "suit" seeking damages for "bodily injury" or "property damage" to which this insurance does not apply. We may, at our discretion, investigate any occurrence and settle any claim or "suit" that may result. But:

(1) The amount we will pay for damages is limited as described in Section **III** – Limits Of Insurance; and

(2) Our right and duty to defend ends when we have used up the applicable limit of insurance in the payment of judgments or settlements.

No other obligation or liability to pay sums or perform acts or services is covered unless explicitly provided for under Supplementary Payments – Coverage **A**.

b. This insurance applies to "bodily injury" and "property damage" only if:

(1) The "bodily injury" or "property damage" occurs during the policy period; and

(2) The "bodily injury" or "property damage" arises out of acts or omissions at the "job location" which are related to or are in connection with the "work" described in the Declarations.

c. Damages because of "bodily injury" include damages claimed by any person or organization for care, loss of services or death resulting at any time from the "bodily injury".

2. Exclusions

This insurance does not apply to:

a. Expected Or Intended Injury

"Bodily injury" or "property damage" expected or intended from the standpoint of the insured. This exclusion does not apply to "bodily injury" resulting from the use of reasonable force to protect persons or property.

b. Contractual Liability

"Bodily injury" or "property damage" for which the insured is obligated to pay damages by reason of the assumption of liability in a contract or agreement. This exclusion does not apply to liability for damages assumed in a contract or agreement that is a "covered contract".

c. Completed Work

"Bodily injury" or "property damage" occurring after the "work" is completed. The "work" will be deemed completed at the earliest of the following times:

(1) When all the "work" called for in the "contractor's" contract has been completed.

(2) When all the "work" to be done at the "job location" has been completed.

(3) When that part of the "work" done at the "job location" has been put to its intended use by you, the governmental authority or other contracting party.

This exclusion does not apply to "bodily injury" or "property damage" resulting from the existence of or removal of tools, uninstalled equipment or abandoned or unused materials.

SAMPLE

 © Insurance Services Office, Inc., 2012

d. Acts Or Omissions Of Insured

"Bodily injury" or "property damage", the sole proximate cause of which is an act or omission of any insured other than acts or omissions of any of "your designated employees". This exclusion does not apply to injury or damage sustained at the "job location" by any of "your designated employees" or employee of the "contractor", or by any employee of the governmental authority or any other contracting party (other than you) specified in the Declarations.

e. Workers' Compensation And Similar Laws

Any obligation of the insured under a workers' compensation, disability benefits or unemployment compensation law or any similar law. This exclusion does not apply to any obligation of the insured under the Federal Employers Liability Act, as amended.

f. Pollution

"Bodily injury" or "property damage" arising out of the actual, alleged or threatened discharge, dispersal, seepage, migration, release or escape of "pollutants" at or from the "job location":

(1) Due to the past or present use of the "job location" by you or for you or others for the handling, storage, disposal, processing or treatment of waste; or

(2) Due to the dumping or disposal of waste on the "job location" by the "contractor" with the knowledge of you or any of "your designated employees"; or

(3) On which you or "contractors" working directly or indirectly on any insured's behalf are performing operations if the "pollutants" are brought on or to the "job location" in connection with such operations by you, the "contractor" or "your designated employee". However, this subparagraph does not apply to:

(a) "Bodily injury" or "property damage" arising out of fuels or lubricants for equipment used at the "job location".

(b) "Bodily injury" or "property damage" arising out of heat, smoke or fumes from a "hostile fire".

(4) On which you or "contractors" working directly or indirectly on any insured's behalf are performing operations if the operations are to test for, monitor, clean up, remove, contain, treat, detoxify or neutralize, or in any way respond to, or assess the effects of, "pollutants".

g. Damage To Owned, Leased Or Entrusted Property

"Property damage" to property owned by you or leased or entrusted to you under a lease or trust agreement.

h. War

"Bodily injury" or "property damage", however caused, arising, directly or indirectly, out of:

(1) War, including undeclared or civil war;

(2) Warlike action by a military force, including action in hindering or defending against an actual or expected attack, by any government, sovereign or other authority using military personnel or other agents; or

(3) Insurrection, rebellion, revolution, usurped power, or action taken by governmental authority in hindering or defending against any of these.

COVERAGE B – PHYSICAL DAMAGE TO PROPERTY

1. Insuring Agreement

We will pay for "physical damage to property" to which this insurance applies. The "physical damage to property" must occur during the policy period. The "physical damage to property" must arise out of acts or omissions at the "job location" which are related to or in connection with the "work" described in the Declarations. The property must be owned by or leased or entrusted to you under a lease or trust agreement.

2. Exclusions

This insurance does not apply to "physical damage to property":

a. Completed Work

Occurring after the "work" is completed. The "work" will be deemed completed at the earliest of the following times:

(1) When all the "work" called for in the "contractor's" contract has been completed.

(2) When all the "work" to be done at the "job location" has been completed.

(3) When that part of the "work" done at the "job location" has been put to its intended use by you, the governmental authority or other contracting party.

This exclusion does not apply to "physical damage to property" resulting from the existence of tools, uninstalled equipment or abandoned or unused materials.

 © Insurance Services Office, Inc., 2012

SAMPLE

b. **Acts Or Omissions Of Insured**

The sole proximate cause of which is an act or omission of any insured other than acts or omissions of any of "your designated employees".

c. **Nuclear Incidents Or Conditions**

Due to nuclear reaction, nuclear radiation or radioactive contamination or to any related act or condition.

d. **Pollution**

Due to the discharge, dispersal, seepage, migration, release or escape of "pollutants" excluded under Exclusion f. Pollution, Coverage **A**.

SUPPLEMENTARY PAYMENTS – COVERAGE A

We will pay, with respect to any claim we investigate or settle, or any "suit" against an insured we defend:

1. All expenses we incur.
2. All court costs taxed against the insured in the "suit". However, these payments do not include attorneys' fees or attorneys' expenses taxed against the insured.
3. All interest on the full amount of any judgment that accrues after entry of the judgment and before we have paid, offered to pay, or deposited in court the part of the judgment that is within the applicable limit of insurance.
4. The cost of bonds to release attachments, but only for bond amounts within the applicable limit of insurance. We do not have to furnish these bonds.
5. Expenses incurred by the insured for first aid administered to others at the time of an accident, for "bodily injury" to which this insurance applies.
6. All reasonable expenses incurred by the insured at our request to assist us in the investigation or defense of the claim or "suit", including actual loss of earnings up to $250 a day because of time off from work.
7. Prejudgment interest awarded against the insured on that part of the judgment we pay. If we make an offer to pay the applicable limit of insurance, we will not pay any prejudgment interest based on that period of time after the offer.

These payments will not reduce the limits of insurance.

SECTION II – WHO IS AN INSURED

1. You are an insured.
2. Your "executive officers" and directors are insureds, but only with respect to their duties as your officers and directors.
3. Your stockholders are insureds, but only with respect to their liability as stockholders.
4. Any railroad operating over your tracks is an insured.

SECTION III – LIMITS OF INSURANCE

1. The Limits of Insurance shown in the Declarations and the rules below fix the most we will pay regardless of the number of:
   a. Insureds;
   b. Claims made or "suits" brought; or
   c. Persons or organizations making claims or bringing "suits".
2. The Aggregate Limit is the most we will pay for the sum of all damages because of all "bodily injury", all "property damage" and all "physical damage to property".
3. Subject to Paragraph 2. above, the Each Occurrence Limit is the most we will pay for the sum of all damages because of all "bodily injury", all "property damage" and all "physical damage to property" arising out of any one occurrence.
4. Subject to Paragraph 3. above, the payment for "physical damage to property" shall not exceed the lesser of:
   a. The actual cash value of the property at the time of loss; or
   b. The cost to repair or replace the property with other property of like kind or quality.

The Limits of Insurance of this Coverage Part apply separately to each consecutive annual period and to any remaining period of less than 12 months, starting with the beginning of the policy period shown in the Declarations, unless the policy period is extended after issuance for an additional period of less than 12 months. In that case, the additional period will be deemed part of the last preceding period for purposes of determining the Limits of Insurance.

SECTION IV – CONDITIONS

A. The following Conditions apply to Coverages **A** and **B**:

1. **Assignment**

   Assignment of interest under this Coverage Part shall not bind us unless we issue an endorsement consenting to the assignment.

2. **Bankruptcy**

   Bankruptcy or insolvency of the insured or of the insured's estate will not relieve us of our obligations under this Coverage Part.

3. **Cancellation**

   a. You may cancel this policy by mailing or delivering to us advance written notice of cancellation.

 © Insurance Services Office, Inc., 2012

SAMPLE

b. We may cancel this policy by mailing or delivering to you, the "contractor" and any involved governmental authority or other contracting party designated in the Declarations, at the respective mailing addresses last known to us, written notice of cancellation at least 60 days before the effective date of cancellation.

c. Notice of cancellation will state the effective date of cancellation. The policy period will end on that date.

d. If this policy is cancelled, any unearned premium will be refunded. If we cancel, the refund will be pro rata. If you cancel, the refund may be less than pro rata. The cancellation will be effective even if we have not made or offered a refund.

e. If notice is mailed, proof of mailing will be sufficient proof of notice.

4. **Changes**

This policy contains all the agreements between you and us concerning the insurance afforded. You are authorized to make changes in the terms of this policy with our consent. This policy's terms can be amended or waived only by endorsement issued by us and made a part of this policy.

5. **Inspections And Surveys**

a. We have the right to:

(1) Make inspections and surveys at any time;

(2) Give you reports on the conditions we find; and

(3) Recommend changes.

b. We are not obligated to make inspections, surveys, reports or recommendations and any such actions we do undertake relate only to insurability and the premiums to be charged. We do not make safety inspections. We do not undertake to perform the duty of any person or organization to provide for the health or safety of workers or the public. And we do not warrant that conditions:

(1) Are safe or healthful; or

(2) Comply with laws, regulations, codes or standards.

c. Paragraphs a. and b. of this condition apply not only to us, but also to any rating, advisory, rate service or similar organization which makes insurance inspections, surveys, reports or recommendations.

d. Paragraph b. of this condition does not apply to any inspections, surveys, reports or recommendations we may make relative to certification, under state or municipal statutes, ordinances or regulations, of boilers, pressure vessels or elevators.

6. **Other Insurance**

The insurance afforded by this policy is:

a. Primary insurance and we will not seek contribution from any other insurance available to you except if the other insurance is provided by a contractor other than the designated contractor for the same operation and "job location"; and

b. If the other insurance is available, we will share with that other insurance by the method described below.

If all of the other insurance permits contribution by equal shares, we will follow this method also. Under this approach, each insurer contributes equal amounts until it has paid its applicable limit of insurance or none of the loss remains, whichever comes first.

If any of the other insurance does not permit contribution by equal shares, we will contribute by limits. Under this method, each insurer's share is based on the ratio of its applicable limit of insurance to the total applicable limits of insurance of all insurers.

7. **Premium And Premium Audit**

a. We will compute all premiums for this Coverage Part in accordance with our rules and rates.

b. Contract cost, the premium base shown in the Declarations, means the total cost of the operations described in the Declarations.

c. The premium shown in the Declarations as advance premium is a deposit premium only. At the close of each audit period we will compute the earned premium for that period and send notice to the "contractor" designated in the Declarations. The due date for audit and retrospective premiums is the date shown as the due date on the bill. If the sum of the advance and audit premiums paid for the policy period is greater than the earned premium, we will return the excess to the contractor designated in the Declarations.

In no event shall the payment of premium be your obligation.

 © Insurance Services Office, Inc., 2012

SAMPLE

8. **Transfer Of Rights Of Recovery Against Others To Us**

   If the insured has rights to recover all or part of any payment we have made under this policy, those rights are transferred to us. The insured must do nothing after loss to impair them. At our request, the insured will bring "suit" or transfer those rights to us and help us enforce them.

9. **When We Do Not Renew**

   If we decide not to renew this Coverage Part, we will mail or deliver to the first Named Insured shown in the Declarations written notice of the nonrenewal not less than 30 days before the expiration date.

   If notice is mailed, proof of mailing will be sufficient proof of notice.

B. The following Conditions apply to Coverage **A** only:

1. **Legal Action Against Us**

   No person or organization has a right under this policy:

   a. To join us as a party or otherwise bring us into a "suit" asking for damages from an insured; or

   b. To sue us on this policy unless all of its terms have been fully complied with.

   A person or organization may sue us to recover on an agreed settlement or on a final judgment against an insured; but we will not be liable for damages that are not payable under the terms of this policy or that are in excess of the applicable limit of insurance. An agreed settlement means a settlement and release of liability signed by us, the insured and the claimant or the claimant's legal representative.

2. **Duties In The Event Of Occurrence, Claim Or Suit**

   a. You must see to it that we are notified as soon as practicable of an occurrence which may result in a claim. To the extent possible, notice should include:

      (1) How, when and where the occurrence took place;

      (2) The names and addresses of any injured persons and witnesses; and

      (3) The nature and location of any injury or damage arising out of the occurrence.

   b. If a claim is made or "suit" is brought against any insured, you must:

      (1) Immediately record the specifics of the claim or "suit" and the date received; and

      (2) Notify us as soon as practicable.

      You must see to it that we receive written notice of the claim or "suit" as soon as practicable.

   c. You and any other involved insured must:

      (1) Immediately send us copies of any demands, notices, summonses or legal papers received in connection with the claim or "suit";

      (2) Authorize us to obtain records and other information;

      (3) Cooperate with us in the investigation or settlement of the claim or defense against the "suit"; and

      (4) Assist us, upon our request, in the enforcement of any right against any person or organization which may be liable to the insured because of injury or damage to which this insurance may also apply.

   d. No insured will, except at that insured's own cost, voluntarily make a payment, assume any obligation, or incur any expense, other than for first aid, without our consent.

3. **Separation Of Insureds**

   Except with respect to the Limits of Insurance, this insurance applies:

   a. As if each Named Insured were the only Named Insured; and

   b. Separately to each insured against whom claim is made or "suit" is brought.

C. The following Conditions apply to Coverage **B** only:

1. **Appraisal**

   If you fail to agree with us on the value of the property, or the amount of loss, either you or we may make written demand for an appraisal of the loss within 60 days after proof of loss is filed. In this event, each party will select a competent appraiser. The two appraisers will select a competent and impartial umpire. The appraisers will state separately the value of the property and the amount of loss. If they fail to agree, they will submit their differences to the umpire. A decision agreed to by any two will be binding. Each party will:

   a. Pay its chosen appraiser; and

   b. Bear the other expenses of the appraisal and umpire equally.

   If we submit to an appraisal, we still retain our right to deny the claim.

SAMPLE

2. **No Benefit To Bailee**

   No person or organization, other than you, having custody of the property will benefit from this insurance.

3. **Insured's Duties In The Event Of A Loss**

   You must:

   a. Protect the property, whether or not the loss is covered by this policy. Any further loss due to your failure to protect the property shall not be recoverable under this policy. Reasonable expenses incurred in affording such protection shall be deemed to be incurred at our request; and

   b. Submit to us, as soon after the loss as possible, your sworn proof of loss containing the information we request to settle the loss and, at our request, make available the damaged property for examination.

4. **Legal Action Against Us**

   No person or organization has a right under this policy to sue us on this policy unless all of its terms have been fully complied with and until 30 days after proof of loss is filed and the amount of loss is determined as provided in this policy.

5. **Payment Of Loss**

   We may pay for the loss in money, but there can be no abandonment of any property to us.

SECTION V – DEFINITIONS

1. "Bodily injury" means bodily injury, sickness or disease sustained by a person, including death resulting from any of these at any time.

2. "Contractor" means the contractor designated in the Declarations and includes all subcontractors working directly or indirectly for that "contractor" but does not include you.

3. "Covered contract" means any contract or agreement to carry a person or property for a charge or any interchange contract or agreement respecting motive power, or rolling stock equipment.

4. "Executive officer" means a person holding any of the officer positions created by your charter, constitution, bylaws or any other similar governing document.

5. "Hostile fire" means one which becomes uncontrollable or breaks out from where it was intended to be.

6. "Job location" means the job location designated in the Declarations including any area directly related to the "work" designated in the Declarations. "Job location" includes the ways next to it.

7. "Physical damage to property" means direct and accidental loss of or damage to rolling stock and their contents, mechanical construction equipment or motive power equipment, railroad tracks, roadbeds, catenaries, signals, bridges or buildings.

8. "Pollutants" means any solid, liquid, gaseous or thermal irritant or contaminant, including smoke, vapor, soot, fumes, acids, alkalis, chemicals and waste. Waste includes material to be recycled, reconditioned or reclaimed.

9. "Property damage" means:

   a. Physical injury to tangible property, including all resulting loss of use of that property. All such loss of use shall be deemed to occur at the time of the physical injury that caused it; or

   b. Loss of use of tangible property that is not physically injured. All such loss of use shall be deemed to occur at the time of the occurrence that caused it.

10. "Suit" means a civil proceeding in which damages because of "bodily injury" or "property damage" to which this insurance applies are alleged. "Suit" includes:

    a. An arbitration proceeding in which such damages are claimed and to which the insured must submit or does submit with our consent; or

    b. Any other alternative dispute resolution proceeding in which such damages are claimed and to which the insured submits with our consent.

11. "Work" means work or operations performed by the "contractor" including materials, parts or equipment furnished in connection with the work or operations.

12. "Your designated employee" means:

    a. Any supervisory employee of yours at the "job location";

    b. Any employee of yours while operating, attached to or engaged on work trains or other railroad equipment at the "job location" which are assigned exclusively to the "contractor"; or

    c. Any employee of yours not described in Paragraph a. or b. above who is specifically loaned or assigned to the work of the "contractor" for the prevention of accidents or protection of property.

SAMPLE

 © Insurance Services Office, Inc., 2012

Performance Bond

BOND NO. _____
PREMIUM: _____

WHEREAS, The _____, (hereinafter designated as "Obligee") and _____ (hereinafter designated as "Principal") have entered into an agreement whereby principal agrees to install and complete certain designated public improvements, which said agreement, dated _____ , and identified as project _____ is hereby referred to and made a part hereof; and

WHEREAS, Said principal is required under the terms of said agreement to furnish a bond for the faithful performance of said agreement;

NOW, THEREFORE, We, the principal and _____ as surety, are held and firmly bound unto the hereinafter called "The Obligee," in the penal sum of _____ dollars ($ _____) lawful money of the United States for the payment of which sum well and truly to be made, we bind ourselves, our heirs, successors, executors and administrators, jointly and severally firmly by these presents.

The condition of this obligation is such that if the above bound principal, his or its heirs, executors, administrators, successors or assigns, shall in all things stand to and abide by, and well and truly keep and perform the covenants, conditions and provisions in the said agreement and any alteration thereof made as therein provided, on his or their part, to be kept and perform and at the time and in the manner therein specified, and in all respects according to their true intent and meaning, and shall indemnify and save harmless the Obligee, its officers, agents and employees, as therein stipulated, then this obligation shall become null and void; otherwise it shall be and remain in full force and effect.

As part of the obligation secured hereby and in addition to the face amount specified therefore, there shall be included costs and reasonable expenses and fees, including reasonable attorney's fees, incurred by county in successfully enforcing such obligation, all to be taxed as costs and included in any judgment rendered.

The surety hereby stipulates and agrees that no change, extension of time, alteration or addition to the terms of the agreement or to the work to be performed thereunder or the specification accompanying the same shall in any wise affect its obligations on this bond, and it does hereby waive notice of any such change, extension of time, alteration or addition to the terms of the agreement or to the work or to the specifications.

IN WITNESS WHEREOF, this instrument has been duly executed by the principal and surety above named, on

By _____
PRINCIPAL
By: _____
PRINCIPAL
By: _____
ATTORNEY-IN-FACT

SAMPLE

Payment (Labor & Materials) Bond

BOND NO._____

KNOW ALL MEN/WOMEN BY THESE PRESENT that we,_____ as Principal (also referred to herein as "CONTRACTOR"), and _____ as Surety, are held and firmly bound unto _____, hereinafter called "OWNER," in the sum of _____Dollars ($_____), for the payment of which sum, well and truly to be made, we bind ourselves, our heirs, executors, administrators, successors, and assigns, jointly and severally, firmly by these present.

The condition of the above obligation is such that, whereas said Principal has been awarded and is about to enter into the annexed Contract for the _____ [NAME OF PROJECT], in accordance with OWNER's Call for Bids documents and Principal's Bid Dated _____, and to which reference is hereby made for all particulars, and is required by said "OWNER" to give this bond in connection with the execution of said Contract;

NOW, THEREFORE, if said CONTRACTOR, its Subcontractors, its heirs, executors, administrators, successors, or assigns, shall fail to pay (a) for any materials, provisions, equipment, or other supplies used in, upon, for or about the performance of the WORK contracted to be done under the Contract, or (b) for any work or labor thereon of any kind contracted to be done under the Contract, or (c) for amounts due under the Unemployment Insurance Code with respect to work or labor performed pursuant to the Contract, or (d) for any amounts required to be deducted, withheld, and paid over to the Employment Development Department from the wages of employees of the CONTRACTOR and its Subcontractors under Section 13020 of the Unemployment Insurance Code with respect to such work and labor, in each case, as required by the provisions of Sections 9550-9566 inclusive, of the Civil Code of the State of California and acts amendatory thereof, and sections of other codes of the State of California referred to therein and acts amendatory thereof, and provided that the persons, companies, corporations or other entities so furnishing said materials, provisions, provender, equipment, or other supplies, appliances, or power used in, upon, for, or about performance of the Work contracted to be executed or performed, or any person, company, corporation or entity renting or hiring implements or machinery or power for or contributing to said Work to be done, or any person who performs work or labor upon the same, or any person, company, corporation or entity who supplies both work and materials therefor, shall have complied with the provisions of said laws, then said Surety will pay in full the same in an amount not exceeding the sum hereinabove set forth and also will pay, in case suit is brought upon this bond, a reasonable attorney's fee, as shall be fixed by the Court. This bond shall inure to the benefit of any and all persons named in Section 9100 of the Civil Code of the State of California so as to give a right of action to them or their assigns in any suit brought upon this bond.

PROVIDED, that any alterations in the WORK to be done or the materials to be furnished, or changes in the time of completion, which may be made pursuant to the terms of said Contract Documents, shall not in any way release said CONTRACTOR or said Surety thereunder, nor shall any extensions of time granted under the provisions of said Contract Documents release either said

SAMPLE

CONTRACTOR or said Surety, and notice of such alterations or extensions of the Agreement is hereby waived by said Surety.

IN WITNESS WHEREOF, the Principal and the Surety have executed this instrument in duplicate this _____ day of _____, 20_____.

_____	_____
Surety	Principal
By: _____	By: _____
_____	_____
Print Name/Title	Print Name/Title
_____	_____
Address	Address
(_____)_____	(_____)_____
Telephone Number	Telephone Number
_____	_____
Email Address	Email Address

SAMPLE

NOTARIAL CERTIFICATE OF ATTORNEY IN FACT AND SEAL OF SURETY MUST BE ATTACHED.

(Optional Form)

This blanket endorsement modifies insurance provided under the following:

Project Name: _____

Named Insured: Las Gallinas Valley Sanitary District, its officers, officials, employees and volunteers, 300 Smith Ranch Road, San Rafael, CA 94903

Effective Work Date(s): _____

Insuring Company: _____ **Policy No.:** _____

Description of Work/Locations/Vehicles:

_____

AGENCY NAME AND ADDRESS:

ADDITIONAL INSURED:

The Agency, its elected or appointed officers, officials, employees and, volunteers are included as insureds with regard to damages and defense of claims arising from: (Check all that apply)

General Liability: (a) activities performed by or on behalf of the Named Insured, (b) products and completed operations of the Named Insured, (c) premises owned, leased occupied or used by the Named Insured, and/or (d) permits issued for operations performed by the Named Insured. {Note: MEETS OR EXCEEDS ISO Form # CG 20 10 11 85}

Auto Liability**: the ownership, operation, maintenance, use, loading or unloading of any auto owned, leased, hired or borrowed by the Named Insured, regardless of whether liability is attributable to the Named Insured or a combination of the Named Insured and the Agency, its elected or appointed officers, officials, employees or volunteers.**

Other: _____

PRIMARY/NON-CONTRIBUTORY: This insurance is primary and is not additional to or contributing with any other insurance carried by or for the benefit of Additional Insureds.

PROVISIONS REGARDING THE INSURED'S DUTIES AFTER ACCIDENT OR LOSS: Any failure to comply with reporting provisions of the policy shall not affect coverage provided to the Agency, its elected or appointed officers, officials, employees, or volunteers.

CANCELLATION NOTICE: The insurance afforded by this policy shall not be suspended, voided, canceled, reduced in coverage or in limits except after thirty (30) days' prior written notice (ten (10) days if canceled due to non-payment) by certified mail return receipt requested has been given to the Agency. Such notice shall be addressed as shown above.

WAIVER OF SUBROGATION: The insurer(s) named above agree to waive all rights of subrogation against the Agency, its elected or appointed officers, officials, agents, volunteers and employees for losses paid under the terms of this policy which arise from work performed by the Named Insured for the Agency.

Nothing herein contained shall vary, alter or extend any provision or condition of the Policy other than as above stated.

SIGNATURE OF INSURER OR AUTHORIZED REPRESENTATIVE OF THE INSURER

I, _____, (print/type name), warrant that I have authority to bind the above-named insurance company and by my signature hereon do so bind this company.

SIGNATURE OF AUTHORIZED REPRESENTATIVE (original signature required on endorsement furnished to the Agency)

ORGANIZATION: _____

TITLE: _____

ADDRESS: _____

TELEPHONE: (_____)_____ DATE ISSUED: _____

THIS PAGE INTENTIONALLY LEFT BLANK

APPENDIX C

DIR FORM PWC-100 SUPPLEMENTAL QUESTIONNAIRE

(Submit a completed form for the Contractor and each Subcontractor listed in the List of Proposed Subcontractors submitted with the bid. List Contractor's and all Subcontractors' license number, name, address, phone number, email address, and classification of workers they are providing at the time of the contract signing.)

THIS PAGE LEFT INTENTIONALLY BLANK

Add Contractor - Windows Internet Explorer

DIR https://www.dir.ca.gov/pwc100ext/AddContractorPopup.aspx?ProjectID=3108&GCID=1

Please enter all the information for the Contractor

Contractor

CSLB/Certificate Number:* [ ] Search

Name:

Address:

Phone:

Email:*

Classifications

☐ ASBESTOS	☐ BOILERMAKER	☐ BRICKLAYERS	☐ CARPENTERS
☐ CARPET/LINOLEUM	☐ CEMENT MASONS	☐ DRYWALL FINISHER	☐ DRYWALL/LATHERS
☐ ELECTRICIANS	☐ ELEVATOR MECHANIC	☐ GLAZIERS	☐ IRON WORKERS
☐ LABORERS	☐ MILLWRIGHTS	☐ OPERATING ENG	☐ PAINTERS
☐ PILE DRIVERS	☐ PIPE TRADES	☐ PLASTERERS	☐ ROOFERS
☐ SHEET METAL	☐ SOUND/COMM	☐ SURVEYORS	☐ TEAMSTER
☐ TILE WORKERS			

Cancel Clear Save

100%

THIS PAGE LEFT INTENTIONALLY BLANK

APPENDIX D

MISCELLANEOUS CONTRACT FORMS

THIS PAGE LEFT INTENTIONALLY BLANK

300 SMITH RANCH ROAD, SAN RAFAEL, CA 94903

Change Order No. __

Project No: **Date:**

Project:

Contractor: **Phone**:

Fax:

The following change is hereby made to the contract:

Description of Change:

Reason for Change:

Pricing Data:

Contract Extension:

This Change Order added __ working days to contract completion date.

Las Gallinas Valley Sanitary District (LGVSD), Owner, and the Contractor hereby agree that this change order constitutes full and mutual accord and satisfaction for all time, all costs, and all impacts related to this revision. In accepting this change order, the Contractor agrees that it represents a full and equitable adjustment to the contract, and further agrees to waive all rights to file claim with respect to any difficulties arising from, or as a result of, this change.

Accounting Summary:

Original Contract:	**$0.00**	
Previous Additions:	**$0.00**	
Previous Deductions (-):	**$0.00**	
This Change Order (+/-):	**$0.00**	
Contract to Date:	**$0.00**	

APPROVED:

Michael Cortez, PE Date
District Engineer

Curtis Paxton, PE Date
General Manager

Contractor Date

Change Order Proposal
No. __

To:

Project Name:
Project No:
Contractor:
Reference:

Date Submitted By Contractor:

Description: _____

COST BREAKDOWN FOR CHANGE ORDER PROPOSAL								
Description	**Qty**	**Unit**	**Labor**	**Material**	**Equip**	**Rental**	**Sub**	**Total**
Subtotal:								
Markup Rate for Self Performed Labor/Mat. & Suppliers/Equipment:								
Markup on Subcontractors:								
Total:								

Time extension required for this change: ____

Change Order Pricing
Paragraph 4.5.2 of the General Conditions, Page 1-28 states: "Indirect costs added under a change order **may not exceed an allowance of fifteen (15) percent of the total of combined Contractor and subcontractor direct costs added under the change order**. Such allowance covers Contractor overhead and profit under the change order and includes the cost of insurance in addition to that required pursuant to Section 8.8, bond premiums, superintendent labor, clerical labor, home office expenses, worksite office expenses, and utility costs under the change order. Such costs may not be itemized as direct costs under a change order."

See General Conditions, Paragraph 4 CHANGES IN WORK for more information.

SAMPLE

UNCONDITIONAL WAIVER AND RELEASE ON PROGRESS PAYMENT

NOTICE TO CLAIMANT: THIS DOCUMENT WAIVES AND RELEASES LIEN, STOP PAYMENT NOTICE, AND PAYMENT BOND RIGHTS UNCONDITIONALLY AND STATES THAT YOU HAVE BEEN PAID FOR GIVING UP THOSE RIGHTS. THIS DOCUMENT IS ENFORCEABLE AGAINST YOU IF YOU SIGN IT, EVEN IF YOU HAVE NOT BEEN PAID. IF YOU HAVE NOT BEEN PAID, USE A CONDITIONAL WAIVER AND RELEASE FORM.

Identifying Information

Name of Claimant:

Name of Customer:

Job Location:

Owner: Las Gallinas Valley Sanitary District

Through Date:

Unconditional Waiver and Release

This document waives and releases lien, stop payment notice, and payment bond rights the claimant has for labor and service provided, and equipment and material delivered, to the customer on this job through the Through Date of this document. Rights based upon labor or service provided, or equipment or material delivered, pursuant to a written change order that has been fully executed by the parties prior to the date that this document is signed by the claimant, are waived and released by this document, unless listed as an Exception below. The claimant has received the following progress payment:

$_____

Exceptions

This document does not affect any of the following:
(1) Retentions.
(2) Extras for which the claimant has not received payment.
(3) Contract rights, including (A) a right based on rescission, abandonment, or breach of contract, and (B) the right to recover compensation for work not compensated by the payment.

Signature

Claimant's Signature:

Claimant's Title:

Date of Signature:

UNCONDITIONAL WAIVER AND RELEASE ON FINAL PAYMENT

NOTICE TO CLAIMANT: THIS DOCUMENT WAIVES AND RELEASES LIEN, STOP PAYMENT NOTICE, AND PAYMENT BOND RIGHTS UNCONDITIONALLY AND STATES THAT YOU HAVE BEEN PAID FOR GIVING UP THOSE RIGHTS. THIS DOCUMENT IS ENFORCEABLE AGAINST YOU IF YOU SIGN IT, EVEN IF YOU HAVE NOT BEEN PAID. IF YOU HAVE NOT BEEN PAID, USE A CONDITIONAL WAIVER AND RELEASE FORM.

Identifying Information
Name of Claimant:
Name of Customer:
Job Location:
Owner: Las Gallinas Valley Sanitary District

Unconditional Waiver and Release

This document waives and releases lien, stop payment notice, and payment bond rights the claimant has for all labor and service provided, and equipment and material delivered, to the customer on this job. Rights based upon labor or service provided, or equipment or material delivered, pursuant to a written change order that has been fully executed by the parties prior to the date that this document is signed by the claimant, are waived and released by this document, unless listed as an Exception below. The claimant has been paid in full.

Exceptions
This document does not affect any of the following: Disputed claims for extras in the amount of: $

Signature
Claimant's Signature:
Claimant's Title:
Date of Signature:

CONDITIONAL WAIVER AND RELEASE ON PROGRESS PAYMENT

NOTICE: THIS DOCUMENT WAIVES THE CLAIMANT'S LIEN, STOP PAYMENT NOTICE, AND PAYMENT BOND RIGHTS EFFECTIVE ON RECEIPT OF PAYMENT. A PERSON SHOULD NOT RELY ON THIS DOCUMENT UNLESS SATISFIED THAT THE CLAIMANT HAS RECEIVED PAYMENT.

Identifying Information

Name of Claimant:

Name of Customer:

Job Location:

Owner: Las Gallinas Valley Sanitary District

Through Date:

Conditional Waiver and Release

This document waives and releases lien, stop payment notice, and payment bond rights the claimant has for labor and service provided, and equipment and material delivered, to the customer on this job through the Through Date of this document. Rights based upon labor or service provided, or equipment or material delivered, pursuant to a written change order that has been fully executed by the parties prior to the date that this document is signed by the claimant, are waived and released by this document, unless listed as an Exception below. This document is effective only on the claimant's receipt of payment from the financial institution on which the following check is drawn:

Maker of Check:

Amount of Check: $

Check Payable to:

Exceptions

This document does not affect any of the following:
(1) Retentions.
(2) Extras for which the claimant has not received payment.
(3) The following progress payments for which the claimant has previously given a conditional waiver and release but has not received payment:
Date(s) of waiver and release:_____
Amount(s) of unpaid progress payment(s): $_____
(4) Contract rights, including (A) a right based on rescission, abandonment, or breach of contract, and (B) the right to recover compensation for work not compensated by the payment.

Signature

Claimant's Signature:

Claimant's Title:

Date of Signature:

CONDITIONAL WAIVER AND RELEASE ON FINAL PAYMENT

NOTICE: THIS DOCUMENT WAIVES THE CLAIMANT'S LIEN, STOP PAYMENT NOTICE, AND PAYMENT BOND RIGHTS EFFECTIVE ON RECEIPT OF PAYMENT. A PERSON SHOULD NOT RELY ON THIS DOCUMENT UNLESS SATISFIED THAT THE CLAIMANT HAS RECEIVED PAYMENT.

Identifying Information
Name of Claimant:
Name of Customer:
Job Location:
Owner: Las Gallinas Valley Sanitary District

Conditional Waiver and Release

This document waives and releases lien, stop payment notice, and payment bond rights the claimant has for labor and service provided, and equipment and material delivered, to the customer on this job. Rights based upon labor or service provided, or equipment or material delivered, pursuant to a written change order that has been fully executed by the parties prior to the date that this document is signed by the claimant, are waived and released by this document, unless listed as an Exception below. This document is effective only on the claimant's receipt of payment from the financial institution on which the following check is drawn:

Maker of Check:
Amount of Check: $
Check Payable to:

Exceptions
This document does not affect any of the following: Disputed claims for extras in the amount of: $

Signature
Claimant's Signature:
Claimant's Title:
Date of Signature:

Project: _____

Project No. _____

Progress Payment No:	☐ **Contract**	**Period to:**	
	☐ **Change Order**	***Attach Detail Sheet by Bid Line Item***	

To Owner:	**Las Gallinas Valley Sanitary District**	**Contract Time working days)**	
From Contractor:		Orig. Contract:	0
Via Construction Manager:		Added by CCOs:	0
		Revised Total:	0 days

Contract Summary:

Original Contract Amount:		Previous Total Change Orders:	
Net Change by Change Orders:		Change Orders This Month:	
Total Contract Amount	$0	**Total Change Orders:**	$0

CONTRACT AND CHANGE ORDER WORK

Previous Total Work Completed:			Previous Materials Stored:	
Previous Total Completed and Stored:	$0.00		Materials Added This Period:	
Previous Total Earned Less Retainage:			Materials Moved to Work Completed:	
Work Completed This Period*:			Total Materials Stored:	$0.00
Work Completed Retention this Period (5%):	$0.00	**(a)**	Total Work Completed and Stored to Date:	$0.00
Payment For Work Completed:	**$0.00**	**(b)**		
Total Work Completed to Date	$0.00	*		

reference only - no progress payment toward matls stored until included as work complete; use other template if pymt for matls stored is contracted

Balance to Finish (incl CO's/NIC matls stored):	$0.00		Previous Retainage:	
			Current Total Retainage:	$0.00 *
			Retainage / Escrow for this Period:	**$0.00** **(e)**
Percent Work Completed:	0.0%			
Percent Completed and Stored:	0.0%		Percent to Finish:	100.0%
Percent Paid to Contractor:	0%		Percent Change Orders:	0.00%
Current Payment Due to Contractor:	**$0.00**		**Current Amount Retained/to Escrow:**	**$0.00**
	(b)			**(a) / not to exceed (e)**

CONTRACTOR CERTIFICATION

The Undersigned Contractor certifies that to the best of the Contractor's knowledge, information, and belief, the Work covered by this application for Payment has been completed in accordance with the Contract Documents, that all amounts have been paid by the Contractor for Work which previous Certificates for Payment were issued and Payments received from the Owner, and the current payment shown herein is no due.

Contractor _____ Date: _____

CONSTRUCTION MANAGER'S CERTIFICATE FOR PAYMENT

In accordance with the Contract Documents, based on on-site observations and the data comprising this application, the Construction Manager certifies to the Owner that to the best of the Construction Manager's knowledge, information, and belief, the Work has progressed as indicated, the quality of the Work is in accordance with the Contract Documents, and the Contractor is entitled to payment of the AMOUNT CERTIFIED.

AMOUNT CERTIFIED: **$0.00**

Construction Management _____ Date: _____

OWNER APPROVAL

Las Gallinas Valley Sanitary District _____ Date: _____

Rev (5/29/2015)

300 SMITH RANCH ROAD, SAN RAFAEL, CA 94903

System Outage Request Form
No. __

Project Name:
Project No:
Item:

Requested By: _____ **Company:** _____

Date Submitted By Contractor:

*Note: Non-emergency outage requests should be made no later than **72 hours** prior to the requested date.*

1. **Shutdown is requested on the following system:**

2. **Proposed Start Date:** _____ **Time:** _____ **AM / PM (circle)**
   Estimated Duration: _____ **days / hours (circle)**

3. **Reason for Outage:**

4. **Operations staff assistance required: Yes / No (circle)**
   If yes, please describe:

5. **Method of Approach/Sequence of Events:**

6. **Equipment to be used during shutdown:**

7. **Contingency Plan:**

FOR LGVSD USE ONLY

District Comments:

Other Comments:

☐ **SOR Approved** ☐ **SOR Acceptable with Comments as Noted** ☐ **SOR NOT Approved/Resubmit**

Date of Final Transmission to Contractor: _____

APPROVED:

_____

Mel Liebmann Date
Plant Manager

Project: _____

Project No. _____

Progress Payment No: **Period to:**

Item No.	Description	Quantity	Units	Unit Price	Bid Price	Units To Date	Cost To Date
1							
2							
3							
4							
5							
6							
7							
8							
9							
10							
11							
12							
13							
14							
15							
	BASE CONTRACT						
	ALTERNATES						
	BASE CONTRACT INCLUDING ALTERNATES						
	CHANGE ORDERS						
1							
2							
	TOTAL CHANGE ORDERS						

BASE CONTRACT	Contract to Date	
CHANGE ORDERS / WORK ORDERS / MISC.	Less 5% Retention	
TOTAL CONTRACT	Net Contract to Date	
PERCENT COMPLETED TO DATE	Less Previous Payments	
	Amount Due	

THIS PAGE LEFT INTENTIONALLY BLANK

APPENDIX E

LABOR COMPLIANCE PROGRAM

THIS PAGE LEFT INTENTIONALLY BLANK

LABOR COMPLIANCE PROGRAM HANDOUT

The Agency is committed to enforcing State prevailing wage requirements. The provisions of this law require all contractors to comply with the current prevailing wage rate requirements and all apprenticeship requirements.

The submission of complete and accurate certified payrolls records, including fringe benefit statements, DAS-140, DAS-142, CAC2 and similar forms are a prerequisite to receiving progress payments. Failure to comply with these rules and regulations can result in monies being withheld and penalties imposed. Contractors are advised to be familiar with Labor Code Section 1720 et. seq. For all projects advertised for bid after March 1st 2015 and all projects awarded after April 1, 2015 certified payrolls must be also be submitted to the CMU using eCPR.

- Prime contractor must set up all subcontractors in the eCPR system.
- Any subcontractor must also add all of their subtiers to the eCPR system.

At the time the General Contractor submits any progress payment to the Agency, the following documents are to be submitted by the General Contractor **directly to the CCMI** for all work performed, including work by subcontractors:

- 1 copy of the progress payment request
- A copy of the certified payroll report submitted to the eCPR
- PW26 or similar form listing fringe benefits being paid.
- CAC2 form or equivalent relating to monthly training contributions
- DAS-140 form for each craft employed on the project
- DAS-142 request to train apprentices
- Electrician Certification – Those employing electricians may need to submit additional data to verify the certification status of those employed

Subcontractors are to submit all documentation directly to the General Contractor in a timely (not less than monthly) basis. The General Contractor will then forward all information to CCMI. Failure to submit these documents to CCMI may result in the progress payment being delayed.

Should you have any questions or concerns, you are welcome to contact:
Contractor Compliance and Monitoring (CCMI) directly at:

CONTRACTOR COMPLIANCE AND MONITORING
635 Mariners Island Blvd. Suite 200
San Mateo, CA 94404
Phone (650) 522-4403
Fax (650) 522-4402

SAMPLE

The state labor law requirements applicable to the contract are composed of, but not limited to, the following:

1. Payment of Prevailing Wage Rates
   The award of a public works contract requires that all workers employed on the project be paid not less than the specified general prevailing wage rates by the contractor and its subcontractors. Prevailing wage determinations for this project can be obtained at: **www.dir.ca.gov.** This includes a total package including fringe benefits and training contributions which are paid to the employee or for the benefit of the employee to a bona fide ERISA approved or otherwise unconditionally paid for the benefit of the employee Trust Fund.

   The contractor is responsible for obtaining and complying with all applicable general prevailing wage rates for trades workers and any rate changes, which may occur during the term of the contract. Prevailing wage rates and rate changes are to be posted at the job site for workers to view. Or the contractor may post a notice stating where the prevailing wage determinations are available on the jobsite and the contractor shall provide access to such information upon reasonable notice.

2. All individuals or companies performing prevailing wage work on this project must be registered as a public works contractor and pay an annual fee of $300 to the Department of Industrial Relations (DIR). This includes all work covered by prevailing wage such as trucking, surveying, building inspection and so on.

3. Apprentices
   It is the duty of the contractor and subcontractors to employ registered apprentices on public works projects per Labor Code Section 1777.5; Contractors and subcontractors must submit proof of Public Works Contract Award Information (DAS140) or other documentation for Division of Apprenticeship Standards approved apprenticeship programs. Apprentices are to be employed in all crafts and in all trades with approved training programs. Contactors are to employ apprentices on a ratio of 1 apprentice hour for every 5 journeymen hours or as otherwise approved by the DAS approved Apprenticeship Training Committee. Contractors and subcontractors who do not meet this ratio must submit documentation that apprentices were requested and were not provided and/or not available in sufficient number to meet this ratio. The submission of an accurate DAS142(s) meets this requirement. Additional documentation may be required to verify the apprenticeship status of employees.

4. Penalties
   Penalties, including forfeitures and debarment, shall be imposed for contractor/subcontractor failure to pay prevailing wages, failure to maintain and submit accurate certified payroll records upon request, failure to employ apprentices, and for failure to pay employees for all hours worked at the correct prevailing wage rate, in accordance with Labor Code Sections 1775, 1776, 1777.7, and 1813. Monetary penalties of $200 per day per worker shall be imposed for failure to pay correct prevailing wage; $25 per day per worker shall be imposed for overtime violated; $100 per day per worker for failure to provide certified payroll information; $100-$300 per calendar day for noncompliance of Apprenticeship issues.

5. Certified Payroll Records
   Per Labor Code Section 1776, contractors and subcontractors are required to keep accurate payroll records which reflect the name, address, social security number, and work classification of each employee; the straight time and overtime hours worked each day and each week; the fringe benefits; and the actual per diem wages paid to each journeyperson, apprentice, worker, or other employee hired in connection with a public works project. A listing of all current prevailing wage determinations can be obtained from the Agency's main office or by accessing the Department of Industrial Relation's website at: www.dir.ca.gov

SAMPLE

Employee payroll records shall be certified (signed under penalty of perjury by someone in authority at the company) and shall be made available for inspection at all reasonable hours at the principal office of the contractor/subcontractor, or shall be furnished to any employee, or to his or her authorized representative on request. Disclosure of certified payroll information to anyone other than the Awarding Body, its agent, or the Department of Industrial Relations requires that personal information about the employees (name, address and social security number) listed on the forms be redacted (omitted) to protect employee privacy.

Contractors and subcontractors shall maintain their certified payrolls on a weekly basis and shall submit said payrolls on a monthly basis in conjunction with contractor's requests progress or final payment. In the event that there has been no work performed during a given week, the Certified Payroll Record shall be annotated "No Work" for that week. The Agency or its authorized representative is also authorized to request and review all related payroll records such as time cards, cancelled checks, etc. For all projects awarded after April 1, 2015, certified payrolls must also be submitted to the DIR the electronically through their eCPR system.

While the DIR accepts electronic versions of your certified payroll, the DIR and this agency may also request copies of the original certified payroll and supporting documentation at any time.

6. Nondiscrimination in Employment
   Prohibitions against employment discrimination are contained in Labor Code Sections 1735 and 1777.6; the Government Code; the Public Contracts Code; and Title VII of the Civil Rights Act of 1964, as amended. All contractors and subcontractors are required to implement equal employment opportunities as delineated below:

   a. Equal Employment Poster
      The equal employment poster shall be posted at the job site in a conspicuous place visible to employees and employment applicants for the duration of the project. All other labor and employment related posters are also to be properly displayed on the jobsite.

7. Kickback Prohibited
   Per Labor Code Section 1778, contractors and subcontractors are prohibited from accepting, taking wages illegally, or extracting "kickback" from employee wages;

8. Acceptance of Fees Prohibited
   Contractors and subcontractors are prohibited from exacting any type of fee for registering individuals for public work (Labor Code Section 1779); or for filling work orders on public works contracts (Labor Code Section 1780);

9. Listing of Subcontractors
   Contractors are required to list all subcontractors hired to perform work on a public works project when that work is equivalent to more than one-half of one percent of the total contract amount or $10,000 whichever is greater. (Public Contract Code Section 4100, et seq.);

10. Proper Licensing
    Contractors and subcontractors are required to be properly licensed. Penalties will be imposed for employing workers while unlicensed (Labor Code Section 1021 and Business and Professions Code Section 7000, et seq. under California Contractors License Law);

11. Unfair Competition Prohibited
    Contractors and subcontractors are prohibited from engaging in unfair competition (Business and Professions Code Sections 17200-17208);

12. Workers' Compensation Insurance

SAMPLE

All contractors and subcontractors are required to be insured against liability for workers' compensation, or to undertake self-insurance in accordance with the provisions of Labor Code Section 3700 (Labor Code Section 1861);

13. OSHA
Contractors and subcontractors are required to comply with the Occupational, Safety and Health laws and regulations applicable to the particular public works project.

14. Prompt Payment of Subcontractors and Suppliers
Contractors are required by law to promptly pay their subcontractors and suppliers within seven (7) days of receipt of any progress or final payment from the Public Agency. Likewise the subcontractor and supplier are required to pay their respective subcontractors and suppliers within seven (7) days of receipt of payment from the general contractor. When the payment to the contractor is a release of final retention on the project, those funds must be paid within seven (7) days of receipt.

15. IRCA
Pursuant to the Immigration Reform and Control Act of 1986, employers are required to verify that all employees working on public works contracts are legally able to work in the United States. Employers shall keep on file appropriate I-9 forms and documentation for all workers employed on the jobsite and make such forms available to inspection and review by the LCO upon request.

16. Jobsite Interviews
Jobsite interviews are not required on this project. If the need arises, CCMI may conduct random jobsite interviews on this project.

17. Certification of Electricians
Those employing electricians must comply with employment testing and certification requirements for electricians. Additional information may be required to verify the certification status of those employed.

18. Employee Wage Statements - It is required to provide itemized wage statements (pay stubs) to Employees under Labor Code Section 226.

19. Public Works Contractor Registration – Only those businesses who have registered and paid the applicable fee to the Department of Industrial Relations as a Public Works Contractor will be allowed to work on the project.

SAMPLE

In accordance with federal and state laws, and with the Public Agency's policy and contract documents, the undersigned contractor herein certifies that they will comply with the foregoing labor law requirements; and fully understands that failure to comply with these requirements will subject them to the penalties cited herein.

The contractor also herein certifies that it has been provided with a copy of the Labor Compliance Program Package for Contractors with includes:

1. Labor Law Requirements Checklist (included herein)
2. The Location of Applicable General Prevailing Wage Rate Determinations
3. Blank Certified Payroll Record form
4. Fringe Benefit Statements
5. State apprenticeship contribution form (CAC2)
6. State apprenticeship requirements and form to register apprentices (DAS-140)
7. Request for apprentices (DAS-142)
8. Copy of the Labor Code relating to Public Works and Public Agencies (Part 7, Chapter 1, Sections 1720-1816 can be found at www.dir.ca.gov.

IT IS THE CONTRACTOR'S RESPONSIBILITY TO PROVIDE COPIES OF THE LABOR COMPLIANCE PROGRAM PACKAGE TO ALL LISTED SUBCONTRACTORS AND TO ANY SUBSTITUTED SUBCONTRACTORS.

Project Name and Number:_____

Public Agency:_____

Contractor: Name _____

Contractor Address: _____

Contractor Phone:_____ Fax:_____

License Number: _____Date: _____

I acknowledge that I have been informed and am aware of the foregoing requirements and that I am authorized to make this certification on behalf of _____.
(Name of Contractor)

_____
Signature/Name/Title of Contractor Authorized Representative

SAMPLE

Additional Explanation And Instructions Relating To Required LCP Forms and Information

Certified payroll or non performance documentation - is required for each week from the beginning of the contractor's /subcontractor's work on the project until completion of that contractor's/subcontractor's work. These documents need to reflect a consistent 7 day work week for the entirety of the project. The certified payroll forms need to be complete, listing the employee's correct name, address, social security number, hours worked per day, total hours worked per week, wages, deductions and check number. It is critical that the employee's craft classification be listed correctly. Just listing "Journeyman" or "Laborer" is

not sufficient. Many trades have sub-classifications and it is the contractor's obligation to correctly classify the employees. Employees must be classified and paid based on what type of work they are performing, not merely by title. It is acceptable for an employee to work in more than one trade category per day, but it is the employer's obligation to keep accurate records of the different type of work performed by the employee.

Please be aware non performance statements must be submitted for weeks in which no work is performed. More information about trade classifications and wage rates can be found at www.dir.ca.gov.

Fringe Benefit Statement - In order to complete a payroll audit, we need a copy of the fringe benefit statement listing the fringes being paid to each employee or employees on each trade. You are not required to use the worksheet in the packet, however all the information on that worksheet needs to be included in the documentation we receive. This should show an hourly breakdown of the specific contributions (health, pension, etc.) for each trade and the addresses of the plans being paid into. For contractors who pay medical benefits directly to a medical plan, such as Kaiser or Blue Shield, the monthly payment for each employee must be amortized into an hourly rate. (For example: Joe's health premium is $300 a month, that rate multiplied by 12 (months) divided by 2080 (hours) yields an hourly rate of $1.72 per hour). Similar amortization is allowed for vacation and holiday time paid. Training contributions paid to an approved apprenticeship committee needs to be listed as a separate item on this form (i.e. not just training/other together).

Apprenticeship

Submit contract award information- DAS-140

Submit the contract award information in writing to each of the apprenticeship program sponsors in the area of your public works project within 10 days of the prime execution of the contract or subcontract, but in no event later than the first day in which the contractor has workers employed on the public work. This is simply a notification of award, it is not automatically a request for dispatch of a registered apprentice.

If you are not already approved to train apprentices with an approved apprenticeship committee and you are not willing to abide by the terms of and conditions of an apprenticeship program for this project, then (check Box 3) you must send a copy of the DAS-140 form to ALL approved apprenticeship Training Committee for that craft in the County in which the work is being performed.

Request to employ registered apprentices- DAS-142

A contractor on a public works project must employ one (1) hour of apprentice work for every five (5) hours performed by a journeyman.

All contractors must request for dispatch of an apprentice from an apprenticeship program (for each apprenticeable craft or trade) by giving the program actual notice of the request at least 72 hours (business days only) before the date on which apprentices are required. Contractors who do not receive sufficient number of apprentices from their initial request must continue to request apprentices from all other approved apprenticeship committees in the county, if more than one exists, until the proper ratio of apprentices is reached or until all apprenticeship committees (for that trade) have been contacted at least once.

When an apprentice is dispatched, the employer is required to employ the apprentice for at least one full day of work (8 hours) or 20% of the total apprenticeship hours calculated for the project- unless the total number of journeyman hours total under 40 hours for that craft.

Make training fund contributions – CAC 2

SAMPLE

Contractors who are awarded public works jobs must make training fund contributions in the amount established in the prevailing wage rate publication for journeymen and apprentices. This nominal fee contributes to the assurance that new apprentices coming into the craft will be guaranteed the highest level of training and as those skilled craftsmen retire, the trade will survive.

Contractors who contribute to an apprenticeship program are entitled to a full credit in the amount of those contributions for each apprentice working on the project and to not more than the specified training contribution amount for journeyman.. Contractors who do not contribute to an apprenticeship program must submit their contributions to the California Apprenticeship Council, PO Box 511283, Los Angeles, CA 90051-7838.

Training fund contributions to the Council are due and payable on the 15th day of the month for work performed during the preceding month. The contribution should be paid by check and be accompanied by a computer generated training fund contribution form (CAC – 2) or a letter containing the following information:

1. The name, address and telephone number of the contractor making the contribution.
2. The contractor's license number.
3. The name and address of the public agency that awarded the contract.
4. The jobsite location, including the county where the work was performed.
5. The contract or project number.
6. The time period covered by the enclosed contributions.
7. The contribution rate and total hours worked by apprenticeable occupation.
8. The name of the program(s) that provide apprentices if any.
9. The number if apprentice hours worked, by apprenticeable occupations and by program.

Comments, suggestions and questions welcome. Email to daspublicworks@dir.ca.gov or call your local district office.

* * * * *

* DAS-140 and DAS-142 forms are not required when the Prime contract is less than $30,000 or when the company performing the work is a sole proprietor and is the only worker employed by that company on the project.

SAMPLE

PUBLIC WORKS CONTRACT AWARD INFORMATION

Contract award information must be sent to your Apprenticeship Committee if you are approved to train. If you are not approved to train, you must send the information (which may be this form) to ALL applicable Apprenticeship Committees in your craft or trade in the area of the site of the public work. Go to: http://www.dir.ca.gov/das/PublicWorksForms.htm for information about programs in your area and trade. You may also consult your local Division of Apprenticeship Standards (DAS) office whose telephone number may be found in your local directory under California, State of, Industrial Relations, Division of Apprenticeship Standards.

Do not send this form to the Division of Apprenticeship Standards.

NAME OF YOUR COMPANY	CONTRACTOR'S STATE LICENSE NO
MAILING ADDRESS- NUMBER & STREET, CITY, ZIP CODE	AREA CODE & TELEPHONE NO.
NAME & ADDRESS OF PUBLIC WORKS PROJECT	DATE YOUR CONTRACT EXECUTED
	DATE OF EXPECTED OR ACTUAL START OF PROJECT
NAME & ADDRESS OF PUBLIC AGENCY AWARDING CONTRACT	ESTIMATED NUMBER OF JOURNEYMEN HOURS
	OCCUPATION OF APPRENTICE
THIS FORM IS BEING SENT TO: (NAME & ADDRESS OF APPRENTICESHIP PROGRAM(S))	ESTIMATED NUMBER OF APPRENTICE HOURS
	APPROXIMATE DATES TO BE EMPLOYED

This is not a request for dispatch of apprentices.

Contractors must make a separate request for actual dispatch, in accordance with Section 230.1(a) California Code of Regulations

Check One Of The Boxes Below

1. ☐ We are already approved to train apprentices by the _____ Apprenticeship Committee. We will employ and train under their Standards. Enter name of the Committee

2. ☐ We will comply with the standards of _____ Apprenticeship Committee for the duration of this job only. Enter name of the Committee

3. ☐ We will employ and train apprentices in accordance with the California Apprenticeship Council regulations, including § 230.1 (c) which requires that apprentices employed on public projects can only be assigned to perform work of the craft or trade to which the apprentice is registered and that the apprentices must at all times work with or under the direct supervision of journeyman/men.

Signature _____ *Date* _____

Typed Name _____

Title _____

State of California - Department of Industrial Relations DIVISION OF APPRENTICESHIP STANDARDS

DAS 140 (REV. 1/04)

SAMPLE

REQUEST FOR DISPATCH OF AN APPRENTICE – DAS 142 FORM

DO NOT SEND THIS FORM TO DAS

You may use this form to request dispatch of an apprentice from the Apprenticeship Committee in the craft or trade in the area of the public work. Go to: http://www.dir.ca.gov/DAS/PublicWorksForms.htm for information about programs in your area and trade. You may also consult your local Division Apprenticeship Standards (DAS) office whose telephone number may be found in your local directory under California, State of, Industrial Relations, Division of Apprenticeship Standards. **Except for projects with less than 40 hours of journeyman work, you must request and employ apprentices in no less than 8 hour increments.**

Date:	**Contractor Requesting Dispatch:**
To Applicable Apprenticeship Committee: **Name:** _____ **Address:**_____ _____ **Tel. No.** _____**Fax No.**_____	**Name:** _____ **Address:** _____ _____ **License No.** _____ **Tel. No.** _____**Fax No.**_____

Project Information:

Contract No. _____

Name of the Project: _____

Address:_____

Dispatch Request Information:

Number of Apprentice(s) Needed: _____**Craft or Trade:**_____

Date Apprentice(s) to Report:_____ **(72 hrs. notice required)** **Time to Report:**_____

Name of Person to Report to:_____

Address to Report to:_____

You may use this form to make your written request for the dispatch of an apprentice. Requests for dispatch must be in writing and submitted at least 72 hours in advance (excluding weekends and holidays) via either first class mail, fax or email. ***Proof of submission may be required.*** *Please take note of California Code of Regulations, Title 8, § 230.1 (a) for all applicable requirements regarding apprenticeship requests and/or visit*
http://www.dir.ca.gov/DAS/DASApprenticesOnPublicWorksSummaryOfRequirements.htm
DAS 142 (Revised 12/11)

SAMPLE

GENERAL PREVAILING WAGE DETERMINATION MADE BY THE DIRECTOR OF INDUSTRIAL RELATIONS PURSUANT TO CALIFORNIA LABOR CODE PART 7, CHAPTER 1, ARTICLE 2, SECTIONS 1770, 1773 AND 1773.1

FOR COMMERCIAL BUILDING, HIGHWAY, HEAVY CONSTRUCTION AND DREDGING PROJECTS

CRAFT: # CEMENT MASON

DETERMINATION: NC-23-203-1-2014-2
ISSUE DATE: August 22, 2014
EXPIRATION DATE OF DETERMINATION: June 28, 2015** The rate to be paid for work performed after this date has been determined. If work will extend past this date, the new rate must be paid and should be incorporated in contracts entered into now. Contact the Office of the Director – Research Unit for specific rates at (415) 703-4774.

LOCALITY: All localities within Alameda, Alpine, Amador, Butte, Calaveras, Colusa, Contra Costa, Del Norte, El Dorado, Fresno, Glenn, Humboldt, Kings, Lake, Lassen, Madera, Marin, Mariposa, Mendocino, Merced, Modoc, Monterey, Napa, Nevada, Placer, Plumas, Sacramento, San Benito, San Francisco, San Joaquin, San Mateo, Santa Clara, Santa Cruz, Shasta, Sierra, Siskiyou, Solano, Sonoma, Stanislaus, Sutter, Tehama, Trinity, Tulare, Tuolumne, Yolo, and Yuba counties.

		Employer Payments				Straight-Time		Overtime Hourly Rate		
CLASSIFICATION (JOURNEYPERSON)	Basic Hourly Rate	Health and Welfare	Pension	Vacation and Holiday	Training	Hours[d]	Total Hourly Rate	Daily 1 1/2X	Saturday[a] 1 1/2X	Sunday and Holiday
Cement Mason	$30.00	8.15	9.80	5.24[b]	0.47	8	53.66	68.660	68.660[c]	83.66
Mastic Magnesite Gypsum, Epoxy, Polyester, Resin and all composition masons, swing or slip form scaffolds	$30.75	8.15	9.80	5.24[b]	0.47	8	54.41	69.785	69.785[c]	85.16

# Indicates an apprenticeable craft. The current apprentice wage rates are available on the Internet @ http://www.dir.ca.gov/OPRL/PWAppWage/PWAppWageStart.asp. To obtain any apprentice wage rates as of July 1, 2008 and prior to September 27, 2012, please contact the Division of Apprenticeship Standards or refer to the Division of Apprenticeship Standards' website at http://www.dir.ca.gov/das/das.html.

[a] Saturdays in the same work week may be worked at straight time if a job is shut down during the normal work week due to inclement weather or major mechanical breakdown (limited to curb and gutter machine, concrete pump, and concrete plant).

[b] Includes an amount for supplemental dues.

[c] Rate applies to the first 8 hours of work on Saturday. All other hours worked on Saturday are paid at the Sunday/Holiday rate.

[d] Where multiple shifts are worked, the day shift shall work eight (8) hours and for such work they shall be paid the regular straight time rate for eight (8) hours; the second (2nd) shift shall work seven and one-half (7 ½) hours, and for such work they shall be paid the regular straight time rate for eight (8) hours; if a third (3rd) shift is worked, they shall work seven (7) hours and for such work they shall be paid eight (8) hours regular straight time pay. No multiple shift shall be started for less than five (5) consecutive days.

RECOGNIZED HOLIDAYS: Holidays upon which the general prevailing hourly wage rate for Holiday work shall be paid, shall be all holidays in the collective bargaining agreement, applicable to the particular craft, classification, or type of worker employed on the project, which is on file with the Director of Industrial Relations. If the prevailing rate is not based on a collectively bargained rate, the holidays upon which the prevailing rate shall be paid shall be as provided in Section 6700 of the Government Code. You may obtain the holiday provisions for the current determinations on the Internet at http://www.dir.ca.gov/OPRL/PWD. Holiday provisions for current or superseded determinations may be obtained by contacting the Office of the Director – Research Unit at (415) 703-4774.

TRAVEL AND/OR SUBSISTENCE PAYMENT: In accordance with Labor Code Sections 1773.1 and 1773.9, contractors shall make travel and/or subsistence payments to each worker to execute the work. You may obtain the travel and/or subsistence provisions for the current determinations on the Internet at http://www.dir.ca.gov/OPRL/PWD. Travel and/or subsistence requirements for current or superseded determinations may be obtained by contacting the Office of the Director – Research Unit at (415) 703-4774.

SAMPLE

California Apprenticeship Council - Training Fund Contributions

1. Go to this web link: https://www.dir.ca.gov/DAS/tf/cac2.asp and add it to your favorites.

2. Fill out the New Easy Web App with the necessary information.

3. Please use your Contractor's License Number without the alpha digit. This number can also be used to look up your contributions on the website at: http://www.dir.ca.gov/CA/trainingfund/Tfsearch.html

4. Select the County and Occupation, then fill in the hours and rate and when you hit "tab" the amount is calculated for you.

5. Once you are done filling out the form and verified your information, print out your invoice.

6. *VERY IMPORTANT*: Mail **both** the **invoice** and your **check** payable to: **California Apprenticeship Council** to:

Remit to: ***CALIFORNIA APPRENTICESHIP COUNCIL***
PO BOX 511283
Los Angeles, CA 90051-7838

SAMPLE

CONTRACTOR FRINGE BENEFIT STATEMENT

Contract Number / Name:	Contract Location:	Today's Date:

Contractor / Subcontractor Name:	Business Address:

In order that the proper Fringe Benefit rates can be verified when checking payrolls on the above contract, the hourly rates for fringe benefits, subsistence and/or travel allowance payment made for employees on the various classes of work are tabulated below.

Classification:	Effective Date:	Subsistence or Travel Pay: $ _____

FRINGE BENEFITS			
Health & Welfare	$ _____	PAID TO:	Name: _____ Address: _____
Pension	$ _____	PAID TO:	Name: _____ Address: _____
Vacation/ Holiday	$ _____	PAID TO:	Name: _____ Address: _____
Training	$ _____	PAID TO:	Name: _____
Other	$ _____		Address: _____

Classification:	Effective Date:	Subsistence or Travel Pay: $ _____

FRINGE BENEFITS			
Health & Welfare	$ _____	PAID TO:	Name: _____ Address: _____
Pension	$ _____	PAID TO:	Name: _____ Address: _____
Vacation/ Holiday	$ _____	PAID TO:	Name: _____ Address: _____
Training	$ _____	PAID TO:	Name: _____
Other	$ _____		Address: _____

Classification:	Effective Date:	Subsistence or Travel Pay: $ _____

FRINGE BENEFITS			
Health & Welfare	$ _____	PAID TO:	Name: _____ Address: _____
Pension	$ _____	PAID TO:	Name: _____ Address: _____
Vacation/ Holiday	$ _____	PAID TO:	Name: _____ Address: _____
Training	$ _____	PAID TO:	Name: _____
Other	$ _____		Address: _____

Submitted: Contractor / Subcontractor	By: Name / Title

Supplemental statements must be submitted during the progress of work should a change in rate of any of the classifications be made.

SAMPLE

California Department of Industrial Relations

(Reduced by Antioch Unified Public Agency)

PUBLIC WORKS PAYROLL REPORTING FORM

Page of

NAME OF CONTRACTOR OR SUB CONTRACTOR | CONTRACTORS LICENSE # SPECIALTY LICENSE # | ADDRESS

PAYROLL NO. | FOR WEEK ENDING | SELF-INSURED CERTIFICATE # WORKERS' COMPENSATION POLICY # | PROJECT OR CONTRACT NO. PROJECT AND LOCATION

(1) NAME, ADDRESS AND SOCIAL SECURITY NUMBER OF EMPLOYEE	(2) NO. OF WITH-HOLDING EXEMPTIONS	(3) WORK CLASSIFICATION		(4) Day M T W TH F S S Date / Hours Worked Each Day	(5) TOTAL HOURS	(6) HOURLY RATE OF PAY	(7) GROSS AMOUNT EARNED THIS PROJECT	(7) GROSS AMOUNT EARNED ALL PROJECTS	(8) DEDUCTIONS, CONTRIBUTIONS AND PAYMENTS FED TAX	FICA (SOC SEC)	STATE TAX	SDI	VAC/ HOL	HEALTH & WELF	PENSION	(9) NET WGS PAID FOR WEEK	(9) CHECK NO.
			S														
			O						TRANING	FUND ADMIN	DUES	TRV/ SUBS	SAVINGS	OTHER*	TOTAL DED-UCTIONS		
			S														
			O						TRANING	FUND ADMIN	DUES	TRV/ SUBS	SAVINGS	OTHER*	TOTAL DED-UCTIONS		
			S														
			O						TRANING	FUND ADMIN	DUES	TRV/ SUBS	SAVINGS	OTHER*	TOTAL DED-UCTIONS		
			S														
			O						TRANING	FUND ADMIN	DUES	TRV/ SUBS	SAVINGS	OTHER*	TOTAL DED-UCTIONS		

Form A 1-131 (New 2-80)
(form has been reduced to fit page)

S = Straight Time
O = Overtime
SDI = State Disability Insurance

*OTHER - Any other deductions, contributions and/or payment whether or not included or required by prevailing wage determinations must be separately listed. Use extra sheet if necessary

CERTIFICATION must be completed

I, _____ (Name - Print), the undersigned, am _____ (position with business) with the authority to act for and on behalf of _____ (name of business and/or contractor), certify under penalty of perjury that the records or copies thereof submitted and consisting of _____ (description, no. of pages) are the originals or true, full and correct copies of the originals which depict the payroll record(s) of the actual disbursements by way of cash, check,or whatever form to the individual or individuals named.

Date: _____ Signature: _____

A public entity may require a more strict and/or more extensive form of certification.

SAMPLE

In accordance with federal and state laws, and with the Public Agency's policy and contract documents, the undersigned contractor herein certifies that they will comply with the foregoing labor law requirements; and fully understands that failure to comply with these requirements will subject them to the penalties cited herein.

The contractor also herein certifies that it has been provided with a copy of the Labor Compliance Program Package for Contractors with includes:

1. Labor Law Requirements Checklist (included herein)
2. The Location of Applicable General Prevailing Wage Rate Determinations
3. Blank Certified Payroll Record form
4. Fringe Benefit Statements
5. State apprenticeship contribution form (CAC2)
6. State apprenticeship requirements and form to register apprentices (DAS-140)
7. Request for apprentices (DAS-142)
8. Copy of the Labor Code relating to Public Works and Public Agencies (Part 7, Chapter 1, Sections 1720-1816 can be found at www.dir.ca.gov.

IT IS THE CONTRACTOR'S RESPONSIBILITY TO PROVIDE COPIES OF THE LABOR COMPLIANCE PROGRAM PACKAGE TO ALL LISTED SUBCONTRACTORS AND TO ANY SUBSTITUTED SUBCONTRACTORS.

Project Name and Number:_____

Public Agency:_____

Contractor: Name _____

Contractor Address: _____

Contractor Phone:_____ Fax:_____

License Number: _____Date: _____

I acknowledge that I have been informed and am aware of the foregoing requirements and that I am authorized to make this certification on behalf of _____.
(Name of Contractor)

_____
Signature/Name/Title of Contractor Authorized Representative

SAMPLE

APPENDIX F

MISCELLANEOUS PERMITS

(NOTE: CONTRACTOR MUST, WITHOUT ADDITIONAL EXPENSE TO THE DISTRICT, OBTAIN ALL LICENSES, PERMITS AND OTHER APPROVALS, REQUIRED FOR THE PERFORMANCE OF THIS WORK. SEE APPPLICABLE SECTION OF THE CONTRACT DOCUMENTS FOR OTHER PERMIT REQUIREMENTS NOT SHOWN IN THIS APPENDIX.)

THIS PAGE INTENTIONALLY LEFT BLANK

July 1, 2022
CIWQS Place No. 236597

Las Gallinas Valley Sanitary District
Attention: Chris DeGabriele, Interim General Manager
300 Smith Ranch Road
San Rafael, CA 94903
Sent electronically to cdegabriele@lgvsd.org

Subject: Las Gallinas Valley Sanitary District, Marin County – Enrollment under General Waste Discharge Requirements for the Discharge of Biosolids to Land for Use as a Soil Amendment in Agricultural Activities, Order No. 2004-0012-DWQ

Dear Mr. DeGabriele:

This letter enrolls Las Gallinas Valley Sanitary District (Discharger) under the General Waste Discharge Requirements for the Discharge of Biosolids to Land for Use as a Soil Amendment in Agricultural, Silvicultural, Horticultural, and Land Reclamation Activities, Order No. 2004-0012-DWQ (General Order). This enrollment conditionally authorizes the land application of biosolids, generated from the Discharger's wastewater treatment plant at 300 Smith Ranch Road, San Rafael, in Marin County (Facility), to agricultural areas on District property.

On March 9, 2021, the Discharger submitted a Notice of Intent (NOI) to the San Francisco Bay Regional Water Quality Control Board (Water Board) for coverage under the General Order. Supplemental information was submitted on July 28, 2021. Based on the information presented in the NOI and subsequent documents, the land application of biosolids as described (the Project) is consistent with the General Order's requirements.

The Water Board hereby finds that the General Order is applicable to the Project and that the Discharger is henceforth enrolled under and regulated by the General Order, provided that the Discharger complies with the conditions contained in this letter.

This letter serves as the Notice of Applicability (NOA) for enrollment under the General Order. Due to the Project site conditions, including proximity to the San Francisco Bay and tidal wetlands, shallow groundwater, and surface water drainage, Water Board staff will review this NOA after at least three years of data is available to assess whether the General Order continues to be the appropriate long-term permitting mechanism for the

Project. A site-specific Monitoring and Reporting Program for the Project is included as NOA Att. 1.

The discharge must be managed in accordance with the requirements contained in the General Order, the information submitted in the NOI, and the requirements contained in this NOA. A copy of the General Order is enclosed as Att. 2; it may also be viewed on the Water Board website. (https://www.waterboards.ca.gov/board_decisions/adopted_orders/water_quality/2004/wqo/wqo2004-0012.pdf)

I. PROJECT LOCATION

District property where biosolids will be applied is located northeast of the Facility and include Assessor's Parcel Numbers (APNs) 155-011-13, 155-011-14, and 155-011-33, as shown in the site plan (Att. 3). These parcels are adjacent to San Pablo Bay to the east and primarily open space to the south and west. This land formerly consisted of mudflats and marshlands that have been separated from tidal action by constructing levees along the east and south boundaries in the early 1900s.

The closest residences are located approximately 0.3 miles to the west of parcel 155-01-13. The land directly adjacent to parcel 155-011-33 on the west side is an unused land owned by the Silveira San Rafael Ranch and the land to the north is an unused land previously owned by the St. Vincent's School for Boys. McInnis County Park and Santa Venetia Marsh are located south, approximately 0.5 and 1 miles away, respectively, and the Hamilton Wetlands are located due north.

The geographic location of the property and the biosolids application areas described in this NOA are within the jurisdiction of the Water Board and subject to the San Francisco Bay Basin Water Quality Control Plan (Basin Plan). The Basin Plan designates beneficial uses, establishes water quality objectives, and contains implementation programs and policies for protecting waters of the basin and incorporates by reference State Water Board plans and policies. This NOA and its requirements apply to all biosolids land application areas described herein.

II. PROJECT DESCRIPTION

The Discharger has proposed to land apply Class B biosolids for agricultural use on up to 304 acres of District property (parcels 155-011-13, 155-011-14, and 155-011-33, shown on the site plan in Att. 3). This Project will transition the District from biosolids disposal to biosolids beneficial use.

Biosolids generated from the Facility are treated by gravity thickening and anaerobic digestion in primary and secondary digesters and then pumped to three sludge storage lagoons. The sludge storage lagoons are double-lined and have a total capacity of approximately 3.2 million gallons. Currently, between 200 and 250 dry metric tons of biosolids per year are disposed of onsite at the Discharger's nine-acre dedicated land disposal (DLD) site, shown on the site plan (Att. 3). The Discharger injects liquid biosolids from the sludge storage ponds to the DLD site one to two times per year.

Through this Project, the Discharger will shift from disposing biosolids on nine acres to beneficially using biosolids by land applying on up to 304 acres as a soil amendment for agricultural production. Parcels 155-011-13 and 155-011-14 (238 acres) are currently under agricultural production (pasture hay crop) and irrigated with treated effluent (recycled or reclaimed water). Parcel 155-011-33 (66 acres) is currently unused land that has been disked in the past for weed abatement and is not irrigated; it is planned to be dry farmed for pasture hay crop. Liquid or cake biosolids will be land applied at agronomic rates. In the liquid form (approximately 4% solids), biosolids will be applied using either mobile applicator vehicles and equipment or direct pumping from three existing sludge storage lagoons to the biosolids application areas. Dewatered biosolids cake application may be done at some time in the future at the discretion of the District, at percent solids estimated between 11 and 20%, using a mobile belt press, centrifuge system, or equal, operated by the District or a third-party contractor to the District. A third-party contractor or contractors will be used for biosolids land application and farming services. No in-field storage of liquid biosolids is planned; management of dewatered biosolids cake will comply with General Order requirements. The DLD site will remain in place and be available to dispose biosolids if needed.

The Discharger plans to apply 200 dry metric tons of biosolids annually. Land application is planned to occur between May 1 and October 31 on parcel 155-011-33 and between May 1 and August 15 on parcels 155-011-13 and 155-011-14 to reduce runoff risk and allow crop uptake of nutrients throughout the growing season before harvest.

III. SITE CHARACTERISTICS

The site is located in the Bay Plain geomorphic zone within the Coast Ranges Geomorphic Province, a seismically active province that is characterized by a series of northwest trending faults, mountain ranges, and valleys. The Bay Plain extends from the edge of San Pablo Bay to the foot of the hills west of the site (Jones & Stokes Associates, Inc., 1998). The soils at the site are classified as Reyes series, which occur on estuarine sediments in "reclaimed" diked tidelands and are formed in mixed alluvium from the Bay and streams (National Cooperative Soil Survey, 1985). Underlying the Reyes soil are thick deposits of soft, unconsolidated, organic-rich, highly plastic, water-saturated, silty clays known as Bay Mud. The depth of Bay Mud in the area ranges from 30 to 90 feet below the ground surface (Jones & Stokes Associates, Inc., 1998). Bay Mud is typically classified as an unconfined aquitard due to its low permeability and the absence of a confining layer (The Earth Technology Corporation, 1994).

A. Surface Water and Site Drainage

The topographic maps (USGS, 2018a, 2018b) and aerial photographs (Google Earth, 2020) show sloughs and drainage channels present at and surrounding the site. The general topography at the site is flat with a slight slope to the east with elevations ranging between 4 and -1 feet above mean sea level (MSL). The expected average annual precipitation in the area is 34 inches. The Discharger operates a pumphouse by the levee access road at the southeastern corner of parcel 155-011-14, which is used for runoff control and flood management when needed.

According to historical topographic maps, Miller Creek previously flowed from the west to San Pablo Bay along the north border of parcel 155-011-33 until it was rerouted in the 1940s to flow south along the parcel's west border and then east along the south border of the LGVSD facility (USGS, 1914 and U.S. Army Corps of Engineers, 1942).

B. Groundwater

Groundwater in the vicinity of site is not used as drinking water or for agriculture. The depth to groundwater ranges from near zero to 8 feet below ground surface west of the levees, which is within Bay Mud. Water levels in the monitoring wells at sites in the area remain relatively static and do not indicate a hydraulic gradient from a sloping water table. The hydraulic gradient at nearby sites appears to be tidally influenced and flow perpendicular to the San Pablo Bay edge or toward drainage channels and creeks that exhibit tidal flows (The Earth Technology Corporation, 1994). Groundwater flow direction at parcel 155-011-33 may be influenced by the present and former routes of Miller Creek. Based on the tidal influence exhibited at nearby sites, flat topography, low elevation, and the surface water flow in the area, groundwater flow at the site is anticipated to be tidally influenced and flow west to east and east to west.

IV. CONDITIONS OF ENROLLMENT IN GENERAL ORDER

The Water Board may, in accordance with the General Order, require modifications to proposed discharge activities or additional information to verify that the proposed discharge will not cause or contribute to violations of water quality standards or otherwise impact water quality. Due to the proximity to the Bay and tidal marshland, shallow groundwater, and potential for surface water impacts from runoff and flooding on the parcels, additional conditions for this Project are necessary. Accordingly, in order to maintain coverage under the General Order, the Discharger is required to:

- Participate in the research project *Unregulated Organic Chemicals in Biosolids: Prioritization, Fate and Risk Evaluation for Land Applications*, EPA Grant Number R840245 (Research Project). Coordinate with the Water Board as appropriate, provide timely updates on research progress, and provide project status reports in each annual report for the duration of the Research Project.
- Conduct a biological site assessment of the land application sites prior to land application. In addition to the biological site assessment requirements described in the General Order, Pre-Application Report No. 11, the assessment shall evaluate the potential presence and extent of wetlands. This NOA does not authorize the land application of biosolids to any seasonal wetlands or other waters of the United States.[1]

[1] Code of Federal Regulations, title 40, part 503.14(b) (40 CFR 503.14(b)) states: "Bulk sewage sludge shall not be applied to agricultural land, forest, a public contact site, or a reclamation site that is flooded, frozen, or snow-covered so that the bulk sewage sludge enters a wetland or other waters of the United States, as defined in 40 CFR 122.2, except as provided in a permit issued pursuant to section 402 or 404 of the CWA."

- Complete additional characterization of Discharger biosolids and biosolids disposal and land application sites, as specified in the required technical reports: Biosolids and Site Characterization Workplan and Report.
- Provide a flood protection plan that assesses the vulnerability of the Project to sea level rise and groundwater rise, as specified in the required technical report: Flood Protection Plan.
- Limit the land application period to between May 1 and October 31 on parcel 155-011-33 and between May 1 and August 15 on parcels 155-011-13 and 155-011-14 to reduce runoff risk.
- Conduct additional monitoring as specified in the site-specific Monitoring and Reporting Program.

V. SITE SPECIFIC AND OTHER REQUIREMENTS

- Application of biosolids at a location or in a manner different from that as described in the NOI, this NOA, and the Pre-Application Reports is prohibited.
- The application shall not cause or threaten to cause pollution as defined by California Water Code (Water Code) section 13050.
- There shall be no discharge of biosolids from the storage or application areas to adjacent land areas not regulated by this NOA, to surface water, or to surface water drainage courses.
- The application of biosolids shall comply with all applicable setbacks contained in the General Order.
- Application of biosolids at rates in excess of the nitrogen requirements of the vegetation or at rates that would degrade groundwater quality is prohibited.
- The application of biosolids to water-saturated ground or during periods of precipitation is prohibited.
- The application of Class B biosolids containing a moisture content of less than 50 percent is prohibited.
- The Discharger is required to implement its Monitoring and Reporting Plan.

VI. MONITORING AND REPORTING PROGRAM

The Discharger shall comply with the site-specific Monitoring and Reporting Program in Notice Att. 1, which is attached hereto and made part of this Notice by reference.

VII. TECHNICAL REPORT REQUIREMENTS

The following technical reports are required pursuant to Water Code sections 13383 and 13267. All technical documents shall be signed by and stamped with the seal of a California registered geologist, a California certified engineering geologist, or a California registered civil engineer. The technical reports shall be acceptable to the Water Board's Executive Officer and shall be submitted as described below.

A. Biosolids and Site Characterization Workplan

By February 1, 2023, the Discharger shall submit a workplan to investigate the occurrence of constituents in the Facility biosolids and in soil in and adjacent to the area where biosolids are disposed of and will be applied to the land, as well as groundwater and surface waters receiving stormwater runoff from areas where biosolids are applied to land. Characterization of baseline conditions and conditions after land application occurs shall be included in the workplan; existing historical data may be used to inform baseline conditions. It is anticipated that the District will coordinate with the Research Project in development of this workplan.

At a minimum, the workplan shall include the following:

- Site description and historical property use
- A description of the geology, hydrogeology, and surface water hydrology of the property and vicinity
- Summary of existing information and soil or water quality data, if any, at the property and vicinity, including an evaluation of their relevance to current conditions
- A map showing the proposed sampling locations by media (e.g., soil, groundwater, surface water) with a table or text presenting the rationale for each location
- A description of field sampling methods to be used
- A list of target constituents for laboratory analysis by media (e.g., biosolids, soil, groundwater, and surface water) for a one-time sampling and analysis, rationale for constituent selection, and identification of laboratory analytical methods to be used[2]; the list of target constituents to consider[3]:
    - Constituents required by the General Order
    - EPA Priority Pollutant list (not otherwise included by the General Order)
    - Polycyclic Aromatic Hydrocarbons (PAHs)
    - Volatile Organic Compounds (VOCs)
    - Total Petroleum Hydrocarbon (TPH)
    - Dioxins and furans
    - Per- and Polyfluoroalkyl Substances (PFAS)
    - Flame retardants such as polybrominated diphenyl ethers (PBDEs)

[2] Laboratory reporting limits shall be lower than concentrations that implement applicable limits, water quality objectives, or risk thresholds for the constituents to be analyzed, as reasonable.
[3] The Discharger may propose other constituents or to omit suggested constituents. The list can vary between environmental media, and the Discharger may propose to analyze the biosolids for a more comprehensive list which informs a more targeted list to analyze in other environmental matrices.

  - Relevant endocrine disruptors such as bisphenols, phthalates, and triclosan
  - Ethoxylated surfactants
  - Pesticides including pyrethroids, imidacloprid, and fipronil
- A basis for evaluating the soil, groundwater, and surface water data with suitable ambient background conditions, water quality objectives, or other screening guidelines for the target constituents
  - Biosolids and field soils data shall be evaluated against ambient background conditions; the General Order; *Standards for the Use or Disposal of Sewage Sludge*, Code of Federal Regulations, title 40, part 503 (40 CFR Part 503); *Beneficial Reuse of Dredged Materials: Sediment Screening and Testing Guidelines*, San Francisco Bay Regional Water Quality Control Board Draft Staff Report (May 2000) and *Expert review of the sediment screening guidelines for the beneficial reuse of dredged material in San Francisco Bay*[4] (2020); San Francisco Bay Regional Water Quality Control Board Environmental Screening Levels (ESLs)[5]; and peer-reviewed toxicity thresholds for sediment (for constituents of emerging concern not included in the prior references).
  - Groundwater and surface water data shall be evaluated against ambient background conditions; the General Order; 40 CFR Part 503; ESLs; and peer-reviewed toxicity thresholds for freshwater and marine water.
  - Exceedances of thresholds or screening levels which are not regulatory limits are not considered a violation of this NOA.
- Identification of permits or authorizations to be obtained.
- A schedule for the field implementation of the workplan, data evaluation, and reporting of results.

B. Biosolids and Site Characterization Report

The Discharger shall submit a technical report documenting implementation of the workplan as approved by the Water Board. At a minimum, the report shall include the following:

- Description of preparatory and investigation activities
- Description of the laboratory analytical results for biosolids, soil, groundwater, and surface water
- Data evaluation
- Conclusions and recommendations

[4] Foley, M.; Christian, E.; Goeden, B.; Ross, B. 2020. Expert review of the sediment screening guidelines for the beneficial reuse of dredged material in San Francisco Bay. SFEI Contribution No. 978. San Francisco Estuary Institute: Richmond, CA.
[5] https://www.waterboards.ca.gov/sanfranciscobay/water_issues/programs/esl.html

- A map or maps showing the final locations of field sampling locations and depicting analytical results, as appropriate
- Tables of analytical results
- Copies of laboratory analytical reports and other information (e.g., boring logs, well construction logs)

C. Sampling and Analysis Plan

By February 1, 2023, the Discharger shall submit a sampling and analysis plan sufficient to assure compliance with the terms of the General Order, NOA, and Monitoring and Reporting Program. At a minimum, the sampling and analysis plan shall describe the following:

- Sample chain-of-custody procedures and documentation
- Sampling locations
- Sampling frequencies
- Sample handling/preservation procedures
- Analytical methods
- Sample containers, preservatives, and holding times

D. Flood Protection Plan

By February 1, 2023, the Discharger shall submit a Flood Protection Plan that includes an assessment of the vulnerability of the Project to sea level rise and groundwater rise, as follows:

- ***Sea Level Rise***. Explain how the Discharger manages existing flooding risks at the Project location (e.g., protective measures already in place, planned, or proposed). Explain how the Discharger intends to manage future flooding risks through the expected life of the Project or through 2050 (e.g., planning efforts and protective measures in place, planned, or proposed). What guidance and assumptions are being used to anticipate sea level rise? If the Discharger has not yet established a plan, explain the process and timeline for doing so.
- ***Groundwater Rise***. Explain how the Discharger intends to manage future flooding at the Project location related to groundwater rise through the expected life of the Project or through 2050 (e.g., ongoing planning efforts and protective measures in place, planned, or proposed). If the Discharger has not yet established a plan, explain the process and timeline for doing so. If the Discharger believes it will not be susceptible to flooding related to groundwater rise within 50 years, explain the basis for the conclusion.

The plan shall propose an adaptive management strategy that will be updated every five years and compared against actual sea-level rise and updated projections.

Climate change is shifting precipitation and temperature patterns, exacerbating extreme weather events, and causing sea level and groundwater rise. These conditions have significant implications for the Project.

We consider the Ocean Protection Council's *Sea-Level Rise Guidance*[6] to be the most current authoritative source supporting planning for sea level rise in California. In May 2020, the California Coastal Commission adopted *Making California's Coast Resilient to Sea Level Rise: Principles for Aligned State Action*.[7] The California Environmental Protection Agency, including the State Water Resources Control Board, has endorsed these principles, which recommend using a minimum sea level rise target of 3.5 feet by 2050 for planning purposes. This target applies a safety factor to the California Ocean Protection Council's sea level rise estimates, which do not account for extreme storm surges, tides, or other weather events on top of sea level rise.

The Flood Protection Plan may evaluate and select strategies consistent with the most recent version of the San Francisco Bay Shoreline Adaptation Atlas (currently 2019), prepared by the San Francisco Estuary Institute (Adaptation Atlas). The Adaptation Atlas serves as an important science-based tool for developing adaptation strategies for the Bay shoreline as climate change impacts the shoreline. The Adaptation Atlas uses a framework of Operational Landscape Units (OLUs) where the key purpose of the OLU framework is to identify where it may be possible to use nature-based approaches, such as beaches, marshes, and subtidal reefs, to create a resilient shoreline with multiple benefits. Nature-based approaches, and hybrid measures that integrate nature with engineered structural approaches, may perform better than traditional engineered infrastructure alone.

VIII. ENFORCEMENT

Please review this NOA carefully to ensure that it completely and accurately reflects the discharge of biosolids to land for use as a soil amendment in agricultural activities. Failure to abide by the conditions of the General Order and this NOA could result in enforcement actions, as authorized by provisions of the Water Code.

Prior to implementing any discharge changes, a new NOI must be submitted for continued coverage under the General Order. Alternatively, a Report of Waste Discharge may be submitted for coverage under individual Waste Discharge Requirements.

IX. ANNUAL FEES

The Discharger is responsible for payment of an annual fee, pursuant to Water Code section 13263 and the Annual Fee Schedule as stated in the California Code of Regulations, title 23, division 3, chapter 9, section 2200. The fee amount is determined by the type of order and the threat to water quality and complexity rating. Biosolids

[6] https://opc.ca.gov/webmaster/ftp/pdf/agenda_items/20180314/Item3_Exhibit-A_OPC_SLR_Guidance-rd3.pdf
[7] https://documents.coastal.ca.gov/reports/2020/5/w6g/w6g-5-2020-exhibits.pdf

application projects greater than or equal to 40 acres are deemed as a category "2" threat to water quality rating and a category "B" complexity rating. The corresponding annual fee is currently **$23,783** (2021-22 Fee Schedule). The Water Quality Fee Schedule is subject to change annually and is accessible online at http://www.waterboards.ca.gov/resources/fees/water_quality/#wdr.

The fee is due and payable on an annual basis until coverage under the General Order is formally terminated. Coverage under the General Order may be terminated by submittal of the Final Monitoring and Reporting Program technical report and a Notice of Termination (NOT). For sites using Class B biosolids, termination shall not take place until 38 months after the last Class B biosolids application. The Discharger will be responsible for paying all annual fees until approval of the NOT is granted by the Water Board's Executive Officer. If an individual Waste Discharge Requirements (WDR) Order is issued for this Project, the applicability of this General Order to the Discharger is automatically terminated on the effective date of the individual WDR Order.

X. AUTHORIZATION FOR COVERAGE UNDER ORDER 2004-0012-DWQ

I hereby approve the Project as described in the Notice of Intent and supplemental information to henceforth by regulated under the General Order. Failure to abide by the conditions of the General Order, this Notice of Applicability, and the Monitoring and Reporting Program, could result in enforcement actions, as authorized by provisions of the California Water Code.

If you have any questions or would like to discuss further, contact Margaret Monahan of my staff via email to Margaret.Monahan@waterboards.ca.gov or at (510) 622-2377.

Sincerely,

for Thomas Mumley
Interim Executive Officer

Attachments:
1. Monitoring and Reporting Program
2. General Order 2004-0012-DWQ
3. Project Location and Biosolids Application Area Maps

Copy to (by email): Las Gallinas Valley Sanitary District
Mike Cortez, District Engineer, mcortez@lgvsd.org
Irene Huang, Associate Engineer, ihuang@lgvsd.org

Mary Martis, PE, President, Martis Consultants Corp
Mary.Martis@outlook.com

Water Boards
Keith Lichten, Keith.Lichten@waterboards.ca.gov
Rashid Kaveh, Rashid.Kaveh@waterboards.ca.gov
Ross Steenson, Ross.Steenson@waterboards.ca.gov
Will Burrell, Will.Burrell@waterboards.ca.gov
Brianna St. Pierre, Brianna.St.Pierre@waterboards.ca.gov
Laleh Rastegarzadeh, Laleh.Rastegarzadeh@waterboards.ca.gov

ATTACHMENT 1: Monitoring and Reporting Program

SAN FRANCISCO BAY
REGIONAL WATER QUALITY CONTROL BOARD

MONITORING AND REPORTING PROGRAM
for
LAS GALLINAS VALLEY SANITARY DISTRICT BIOSOLIDS
MARIN COUNTY

I. MONITORING AND REPORTING PROGRAM OVERVIEW

This Monitoring and Reporting Program (Monitoring Program) describes requirements for monitoring biosolids and biosolids disposal and land application areas for Las Gallinas Valley Sanitary District (Discharger).

The Discharger is enrolled under General Waste Discharge Requirements for the Discharge of Biosolids to Land for Use as a Soil Amendment in Agricultural, Silvicultural, Horticultural, and Land Reclamation Activities, Order 2004-0012-DWQ (General Order) via a Notice of Applicability (NOA) letter. The enrollment conditionally authorizes the land application of biosolids, generated from the Discharger's wastewater treatment plant at 300 Smith Ranch Road, San Rafael, in Marin County (Facility), to agricultural areas on District property. The Discharger is responsible for compliance with the monitoring and reporting requirements specified in this Monitoring Program.

Monitoring and reporting responsibilities of waste dischargers are specified in California Water Code (Water Code) sections 13267(b), 13268, and 13383, which authorize the San Francisco Bay Regional Water Quality Control Board (Water Board) to establish monitoring, inspection, entry, reporting, and recordkeeping requirements. This Monitoring Program is issued pursuant to Water Code sections 13383 and 13267.

The monitoring reports are necessary to document the Discharger's compliance with biosolids management requirements including Title 40 of the Code of Federal Regulations (CFR), Part 503, the General Order, and the NOA, and the burden imposed in their preparation bears a reasonable relationship to the need for the reports and the benefits to be obtained from them. More specifically, the monitoring data are needed to evaluate biosolids disposal and land application practices to assure protection of public health and the environment. Mismanagement of biosolids could expose people to pathogens or other harmful constituents and could adversely affect beneficial uses of underlying groundwater, adjacent tidal wetlands, and adjacent surface waters including the San Pablo Bay. The biosolids disposal and land application locations are adjacent to the San Pablo Bay to the east and are separated from tidal action by constructed levees along the east and south boundaries.

Pursuant to Water Code sections 13383 and 13267, the Discharger shall implement this Monitoring Program and submit the monitoring reports described herein.

II. MONITORING AND REPORTING PROGRAM CHANGES

1. The Water Board Executive Officer may authorize changes to the monitoring and reporting practices specified in this Monitoring Program, in consideration of acceptable alternate means of monitoring, and the total inventory of monitoring data. Factors to be considered include the following: data quality, adequate characterization, compliance with requirements, and acceptable means for providing equivalent and adequate monitoring.
2. Requests for changes to monitoring frequencies, parameters, or reporting practices must be submitted to the Regional Water Board in writing, with an evaluation of accumulated data, complete description of proposed changes, and alternate means of monitoring.
3. The Discharger shall not implement changes to authorized monitoring and reporting practices until applicable changes are authorized in writing by the Executive Officer.

III. QUALITY ASSURANCE AND CONTROL

1. All samples shall be representative of the volume and nature of the discharge or matrix of material sampled. The Discharger shall use clean sample containers and sample handling, storage, and preservation methods in accordance with approved U.S. EPA analytical methods or as recommended by the selected analytical laboratory. All analytical samples shall be labeled and records maintained to show the name of the sampler, date, time, sample location, sample type, collection method, bottle type, and any preservative used for each sample. All samples collected for laboratory analyses shall be preserved as required and submitted to the laboratory within the required holding time appropriate for the analytical method used and the constituents analyzed.
2. All samples submitted to a laboratory for analysis shall be identified in a properly completed and signed chain of custody form containing the sampler, date, time, sample location, sample type, collection method, bottle type, and any preservative used for each sample. The chain of custody form shall also contain custody information, including the date, time, transport method, and to whom samples were relinquished.
3. Consistent with Water Code section 13176, data produced and reports submitted for compliance with the General Order must be generated by a laboratory with accreditation from the State Water Board, Division of Drinking Water, Environmental Laboratory Accreditation Program (ELAP), where accreditation is specific to the analyses required, or the laboratory must hold a valid certificate of accreditation for equivalent analytical test methods validated for the intended uses and approved by the State Water Board or regional water board. The laboratory must include quality assurance/quality control data in all data reports and submit electronic data as required by the State Water Board and regional water boards. Where technically feasible, laboratory reporting limits shall be lower than concentrations that implement applicable water quality objectives or limits for the constituents to be analyzed.

4. Monitoring must be conducted according to test procedures approved under 40 CFR part 136 for the analyses of pollutants unless another method is required under 40 CFR chapter 1, subchapter N. Monitoring must be conducted according to sufficiently sensitive test methods approved under 40 CFR part 136 for the analysis of pollutants or pollutant parameters or as required under 40 CFR chapter 1, subchapter N. For the purposes of this paragraph, a method is sufficiently sensitive when:

    a. The method minimum level (ML) is at or below the level of the most stringent effluent limitation established in the permit for the measured pollutant or pollutant parameter, and either the method ML is at or below the level of the most stringent applicable water quality criterion for the measured pollutant or pollutant parameter or the method ML is above the applicable water quality criterion but the amount of the pollutant or pollutant parameter in the facility's discharge is high enough that the method detects and quantifies the level of the pollutant or pollutant parameter in the discharge; or

    b. The method has the lowest ML of the analytical methods approved under 40 CFR part 136 or required under 40 CFR chapter 1, subchapter N, for the measured pollutant or pollutant parameter.

    In the case of pollutants or pollutant parameters for which there are no approved methods under 40 CFR part 136 or otherwise required under 40 CFR chapter 1, subchapter N, monitoring must be conducted according to an appropriate test procedure for such pollutants or pollutant parameters. (40 CFR parts 122.21(e)(3), 122.41(j)(4), 122.44(i)(1)(iv).)

5. Data generated using field tests are exempt pursuant to California Water Code Section 13176. Field instruments may be used to test field parameters (such as for pH, electrical conductivity, and dissolved oxygen) provided that the operator is trained in the proper use of the instrument and each instrument is serviced and/or calibrated at the recommended frequency by the manufacturer and in accordance with manufacturer instructions. Field calibration reports shall be maintained for at least 3 years.

6. All sample and analysis field logs, laboratory reports, and quality assurance/quality control data shall be reported with the sample results to which it applies. The reports shall include applicable information such as the method, equipment, analytical detection, quantitation limits, recovery rates, an explanation for any recovery rate that is outside method specifications, results of method blanks, results of matrix spikes and surrogate samples, and the frequency of quality control analysis. Sample results shall be reported unadjusted for blank results or spike recovery. In cases where contaminants are detected in the quality assurance/quality control samples (e.g., laboratory blanks), the accompanying sample results shall be appropriately flagged.

IV. MONITORING STATIONS

1. **Monitoring Station Definitions**. Stations to be used for sampling and observations in accordance with this Monitoring Program shall be described in each monitoring report submitted in response to this Monitoring Program. The station description shall include the matrix being monitored at that station and the location.
2. **Monitoring Station Changes**. Changes to approved monitoring stations may be authorized by the Executive Officer in order to accommodate changes in operations or to provide improved monitoring. Requests for changes to the monitoring stations must be submitted to the Water Board in writing, with a detailed explanation of the purpose of the proposed station changes. Proposed changes to monitoring stations must be approved in writing from the Executive Officer prior to implementation.
3. **Site Plan Showing All Monitoring Stations**. The Discharger shall develop a legible plan view drawing that clearly depicts the locations of all biosolids management areas, all monitoring stations, and relevant land use features such as buildings, access roads, property boundaries, and surface water drainage systems. A copy of this drawing shall be included with all reports submitted in response to this Monitoring Program.

V. MONITORING REQUIREMENTS

A. BIOSOLIDS MONITORING

The Discharger shall sample and analyze biosolids as follows. Results for chemical constituents shall be reported in milligrams per kilogram (mg/kg) on a dry-weight basis. Whenever possible and appropriate, composite sampling should be conducted (e.g., for metals).

Table 1. Biosolids Monitoring

Constituent	Units[1]	Sample Frequency
EPA Priority Pollutant List	mg/kg, µg/kg	Once every five years
Polycyclic Aromatic Hydrocarbons (PAHs)	µg/kg	Once every five years
Volatile Organic Compounds (VOCs)	µg/kg	Once every five years
Metals[2]	mg/kg	Once per year
Cyanide	mg/kg	Once per year
PCB arochlors, aldrin, dielfrin[3]	µg/kg	Once per year
Semi-volatile organics (SVOCs)[4]	µg/kg	Once per year
Total nitrogen	mg/kg	Once per year
Ammonia nitrogen (as N)	mg/kg	Once per year

Constituent	Units[1]	Sample Frequency
Nitrate nitrogen (as N)	mg/kg	Once per year
Total phosphorous (as P)	mg/kg	Once per year
Total potassium	mg/kg	Once per year
pH	s.u.	Once per year
Salinity	mg/kg	Once per year
Total solids content	%	Once per year
Percent moisture	%	Once per year

[1] mg/kg = milligram per kilogram; µg/kg = microgram per kilogram; MPN/100 g = most probable number per 100 grams; s.u. = standard units; % = percent

[2] Metals include arsenic, cadmium, chromium, copper, lead, mercury, molybdenum, nickel, selenium, silver, and zinc.

[3] PCB arochlors, aldrin, dielfrin: The General Order specifies SW 846 Method 8080.

[4] SVOCs: The General Order specifies EPA Method 8270.

Monitoring for additional constituents may be warranted based on the Biosolids and Site Characterization Report.

B. ROUTINE FIELD MONITORING

The Discharger shall establish and implement an inspection and application oversight program to monitor and control biosolids application rates and ensure compliance with the NOA and General Order. Each discrete application field shall be managed and monitored as follows:

1. Pre-application Oversight:
    a. Define crop to be planted.
    b. Calculated allowable loading rate based on soil nitrogen residual data from the previous fall and most recent plant available nitrogen (PAN) and moisture content data.
    c. Document communication of allowable loading rates to spreader operator.
2. Pre-application Inspection:
    a. Verify that setbacks are clearly delineated.
    b. Verify that runoff controls are in place and functional.
    c. Verify that culverts are blocked (where applicable).
3. Application Oversight:
    a. Verify compliance with setbacks and allowable loading rate.
    b. Verify compliance with soil incorporation requirements.

4. Post-application Oversight:
    a. Confirm with irrigation manager requirements to control runoff for the specified period after application.
    b. Calculate actual biosolids and PAN loading rates.
    c. Note anticipated dates of planting, irrigation, and harvest.

C. SOIL MONITORING

The Discharger shall establish an annual soil sampling program as follows: two background sampling locations outside of the land application areas (e.g., within application setback areas) and, at least six sampling locations within each discrete land application area identified in the NOA. Sampling locations shall be distributed to be representative of each subarea and predominant soil type.

Soil samples shall be collected from each sampling location at the following depths intervals: 0 to 3 inches, 4 to 12 inches, and 13-24 inches below ground surface. The top organic layer of soil must be removed prior to taking sample. Each sample shall be thoroughly mixed to create a composite sample representative of the depth interval and shall be analyzed as specified in the following table. Annual samples shall be collected in the fall (fourth quarter) and must occur at the same time each year.

Table 2. Soil Monitoring

Constituent/Parameter	Units[1]	Sample Frequency
Soil Classification (USCS and USDA)	--	Annually
Total Solids	%	Annually
Total Alkalinity[2]	mg/kg as $CaCO_3$	Annually
Cation Exchange Capacity[2]	meq/100 grams	Annually
Electrical Conductivity	mg/kg, mg/L	Annually
Chloride[3]	mg/L	Annually
pH	s.u.	Annually
Metals[2, 3, 4]	mg/kg, mg/L	Annually

[1] % = percent; mg/kg = milligrams per kilogram; $CaCO_3$ = calcium carbonate; meq/100 grams = milliequivalents per 100 grams soil; mg/L = milligrams per liter; s.u. = standard units

[2] For specified constituents, results shall be reported on a dry-weight basis; show calculations.

[3] For specified constituents, analysis shall be performed on the extract obtained from the Waste Extraction Test using distilled water as the extractant.

[4] Metals include arsenic, cadmium, chromium, copper, lead, mercury, molybdenum, nickel, selenium, silver, and zinc.

D. GROUNDWATER MONITORING

The groundwater monitoring program applies to the groundwater monitoring wells tabulated below and any wells subsequently installed under the Water Board's direction.

Table 3. Groundwater Monitoring Well Network

Parcel	Monitoring Well
155-011-33	MW-01
155-011-33	MW-02
155-011-33	MW-03
155-011-33	MW-04
155-011-14	MW-05
155-011-14	MW-06
155-011-14	MW-07
155-011-14	MW-08
155-011-13	MW-09
155-011-13	MW-10
Dedicated Land Disposal Area	G-1
Dedicated Land Disposal Area	G-3
Dedicated Land Disposal Area	G-4
Dedicated Land Disposal Area	G-5

On July 27, 2021, the Discharger submitted a *Monitoring Well Installation Work Plan* (Work Plan) to the Water Board for review and approval. The Water Board issued comments on the Work Plan on December 15, 2021. A revised Work Plan must be approved prior to Work Plan implementation. Upon completion and development of groundwater monitoring wells installed in accordance with an approved Work Plan, the Discharger shall implement the following groundwater monitoring program for all monitoring wells. Once installed, all new wells shall be added to this Monitoring Program and all wells shall be sampled and analyzed according to the schedule below.

Prior to purging, groundwater elevations shall be measured, and the wells shall be purged of at least three well volumes until temperature, pH, and electrical conductivity have stabilized prior to sampling. Depth to groundwater shall be measured to the nearest 0.01 feet. Water table elevations shall be calculated and used to determine groundwater gradient and direction of flow. Samples shall be collected using approved EPA methods. Groundwater monitoring shall include, at a minimum, constituents specified in the table below. Groundwater elevation shall be determined on depth to

water measurements using a surveyed measuring point elevation on the well and a surveyed reference elevation.

Table 4. Groundwater Monitoring

Constituent/Parameter	Units[1]	Type of Sample	Sample Frequency[2]
Depth to groundwater	0.01 feet	Measurement	Quarterly for first year; semi-annually thereafter
Groundwater elevation	0.01 feet	Calculated	Quarterly for first year; semi-annually thereafter
Gradient magnitude	feet/feet	Calculated	Quarterly for first year; semi-annually thereafter
Gradient direction	Degrees	Calculated	Quarterly for first year; semi-annually thereafter
pH	s.u.	Grab	Quarterly for first year; semi-annually thereafter
Electrical conductivity	µmhos/cm	Grab	Quarterly for first year; semi-annually thereafter
Chloride	mg/L	Grab	Quarterly for first year; semi-annually thereafter
Nitrate as Nitrogen	mg/L-N	Grab	Quarterly for first year; semi-annually thereafter
Nitrite as Nitrogen	mg/L-N	Grab	Quarterly for first year; semi-annually thereafter
Sulfate	mg/L	Grab	Quarterly for first year; semi-annually thereafter
Metals[3]	mg/L	Grab	Quarterly for first year; semi-annually thereafter
Alkalinity	mg/L as $CaCO_3$	Grab	Quarterly for first year; semi-annually thereafter
Total Dissolved Solids (TDS)	mg/L	Grab	Quarterly for first year; semi-annually thereafter
Total Kjeldahl Nitrogen (TKN)	mg/L	Grab	Quarterly for first year; semi-annually thereafter
Total Phosphorous	mg/L	Grab	Quarterly for first year; semi-annually thereafter
Sulfide	mg/L	Grab	Quarterly for first year; semi-annually thereafter
Cyanide	mg/L	Grab	Quarterly for first year; semi-annually thereafter
Ammonia	mg/L	Grab	Quarterly for first year; semi-annually thereafter
Total Organic Carbon (TOC)	mg/L	Grab	Quarterly for first year; semi-annually thereafter

Constituent/Parameter	Units[1]	Type of Sample	Sample Frequency[2]
Total Nitrogen	mg/L	Calculated	Quarterly for first year; semi-annually thereafter
Fecal coliform[4]	MPN/100 mL	Grab	Quarterly for first year; semi-annually thereafter

[1] s.u. = standard units; µmhos/cm = micromhos per centimeter; mg/L = milligrams per liter; $CaCO_3$ = calcium carbonate

[2] Semi-annual samples should be collected at the end of the dry and wet seasons.

[3] Metals include arsenic, cadmium, chromium, copper, lead, mercury, molybdenum, nickel, selenium, silver, and zinc.

[4] Fecal coliform reported as most probable number of colony-forming units per 100 milliliters

VI. REPORTING REQUIREMENTS

All monitoring reports should be converted to a searchable Portable Document Format (PDF) and submittal electronically. All electronic files shall be submitted via the Water Board's centralized WDR monitoring report email address: WDR.Monitoring@waterboards.ca.gov.

A transmittal letter shall accompany each monitoring report. The letter shall include a discussion of all violations during the reporting period and actions taken or planned for correction of each violation. If the Discharger has previously submitted a report describing corrective actions taken and/or a time schedule for implementing the corrective actions, reference to the previous correspondence will be satisfactory. The transmittal letter shall contain a statement by the Discharger or the Discharger's authorized agent certifying under penalty of perjury that the report is true, accurate, and complete to the best of the signer's knowledge.

In reporting monitoring data, the Discharger shall arrange the data in tabular form so that the date, sample type (e.g., biosolids, soil, ground water monitoring, etc.) and reported analytical result for each sample are readily discernible. The data shall be summarized in such a manner to clearly illustrate compliance with waste discharge requirements and spatial or temporal trends, as applicable. The results of any monitoring done more frequently than required at the locations specified in this Monitoring Program shall be reported in the next scheduled monitoring report.

Laboratory analysis reports need to be included in the monitoring reports; all laboratory reports must be retained for a minimum of three years. For a discharger conducting any of its own analyses, reports must also be signed and certified by the chief of the laboratory.

Monitoring information shall include the method detection limit (MDL) and the reporting limit (RL) or practical quantitation limit (PQL). If the regulatory limit for a given constituent is less than the RL (or PQL), then any analytical results of that constituent that are below the RL (or PQL) but above the MDL shall be reported and flagged as estimated.

All monitoring reports that involve planning, investigation, evaluation or design, or other work requiring interpretation and proper application of engineering or geologic sciences, shall be prepared by or under the direction of persons registered to practice in California pursuant to California Business and Professions Code section 6735, 7835, and 7835.1.

A. PRE-APPLICATION REPORT

A Pre-Application Report shall be submitted for each field prior to the application of biosolids in accordance with the General Order and this Monitoring Program. A Pre-Application Report shall be submitted at least 30 days prior to the date of the proposed application. The Pre-Application Report shall be signed by the Discharger (in this case the Discharger is both the owner/operator of the biosolids application operation and the property owner).

B. ANNUAL REPORT

An Annual Report shall be prepared and submitted by February 1 each year. The Annual Report shall include the following:

1. A summary of all analytical data and verification of compliance with the biosolids monitoring requirements.
2. For each discrete application field, a chronological log of dates of biosolids application, irrigation, precipitation, and runoff control operations. Specifically, information demonstrating compliance with the routine field monitoring requirements.
3. For each discrete application field:
    a. Total cumulative metals loading rates as of the end of the previous calendar year;
    b. Calculation of the total metals and nitrogen loading rates for the year;
    c. The cumulative metals loading rates since biosolids land application began; and
    d. The cumulative metals loading rates to date as a percentage of the cumulative metals loading limits.
4. A report of soil monitoring, including:
    a. Sampling and analysis activities, including a scaled map of sampling locations;
    b. Tabulation of all soil analytical results;
    c. Historical time vs. concentration plots for each constituent at each sampling interval;
    d. A discussion of any observed spatial or temporal variation; and
    e. Whether pH adjustment is needed and, if so, how and when the adjustment will be made.

5. A groundwater monitoring summary report including:
    a. Tabular and graphical summaries of all data collected during the year;
    b. An evaluation of the groundwater quality beneath the site;
    c. A discussion of compliance and the corrective actions taken, as well as any planned or proposed actions needed to bring the discharge into full compliance with the waste discharge requirements;
    d. A discussion of any data gaps and potential deficiencies/redundancies in the monitoring system or reporting program; and
    e. The results for all groundwater analyses conducted in the year.
6. A copy of calibration log page(s) verifying calibration of all hand-held monitoring instruments performed during the year.
7. For the duration of the research project *Unregulated Organic Chemicals in Biosolids: Prioritization, Fate and Risk Evaluation for Land Applications*, EPA Grant Number R840245, for which the Discharger is a participating site, the annual report shall include a status update on research project work associated with the Discharger site.

MONITORING PROGRAM CERTIFICATION

The Discharger shall implement this Monitoring and Reporting Program as of the effective date given below.

I, Thomas Mumley, Interim Executive Officer, hereby certify that this Monitoring and Reporting Program:

1. Has been developed in accordance with the procedure set forth in the Board's Resolution No. 73-16 in order to obtain data and document compliance with waste discharge requirements for the subject wastewater systems.
2. May be reviewed at any time subsequent to the effective date upon written notice from the Executive Officer or request from the Discharger, and revisions will be ordered by the Executive Officer.
3. Is effective on the following date: July 1, 2022.

for Thomas Mumley
Interim Executive Officer

ATTACHMENT 2: General Order 2004-0012-DWQ

STATE WATER RESOURCES CONTROL BOARD
WATER QUALITY ORDER NO. 2004 - 0012 - DWQ

GENERAL WASTE DISCHARGE REQUIREMENTS FOR THE DISCHARGE OF BIOSOLIDS TO LAND FOR USE AS A SOIL AMENDMENT IN AGRICULTURAL, SILVICULTURAL, HORTICULTURAL, AND LAND RECLAMATION ACTIVITIES (GENERAL ORDER)

The State Water Resources Control Board (hereinafter referred to as the SWRCB) finds that:

1. Applications for the use of treated municipal sewage sludge meeting the requirements specified in Part 503 in Title 40 of the Code of Federal Regulations (CFR) (hereinafter referred to as biosolids) as a soil amendment have been received and waste discharge requirements (WDRs) have been issued by several of the nine Regional Water Quality Control Boards (RWQCBs). Section 13274 of the California Water Code (CWC) requires the SWRCB or RWQCBs to prescribe General WDRs for the discharge of biosolids used as a soil amendment. This General Order is intended to satisfy the requirements of CWC section 13274 and is intended for discharges of biosolids for use as a soil amendment. This General Order assists in streamlining the regulatory process for such discharges but may not be appropriate for all sites using biosolids due to particular site-specific conditions or locations. Such sites are not precluded from being issued individual WDRs. For the purposes of this General Order, biosolids do not include septage. Biosolids material applicable for coverage under this General Order is as described below:

    a. All Class A biosolids not meeting the requirements contained in Table 3 of 40 CFR Part 503.13 and Class B biosolids that are land applied for agricultural, silvicultural, horticultural, and land reclamation activities;

    b. All Exceptional Quality (EQ) biosolids-derived mixtures consisting of more than or equal to 50 percent biosolids (dry weight) applied at more than 10 dry-tons per acre per year for use as a soil amendment to continuous fields/plots greater than 20 acres for agricultural, silvicultural, horticultural, and land reclamation activities and where the said fields/plots are owned or operated by the same person, company, or partnership;

    c. All EQ biosolids-derived mixtures consisting of 50 percent biosolids or less (dry weight) applied at more than 20 dry-tons per acre per year for use as a soil amendment to continuous fields/plots greater than 20 acres for agricultural, silvicultural, horticultural, and land reclamation activities and where the said fields/plots are owned or operated by the same person, company, or partnership.

2. EQ biosolids may not necessitate regulation in the future. However, it is believed that large scale uses currently require oversight regardless of the actual threat to water quality while done at agronomic rates and using best management practices. Accordingly, this General Order can be applied to such sites to ensure that biosolids are being properly used and are not used in an activity of unregulated

dumping. This regulatory tool may be used to regulate material that is land applied at a high loading rate in order to discourage poor biosolids management and to reduce risk to the public and the environment.

3. Within this General Order, the following terms are described as follows:

   a. Agriculture: The practice, science, or art of using the soil for the production of crops and/or raising livestock for human use.

   b. Agricultural Mineral: Any material containing nitrogen, available phosphoric acid, or soluble potash, singly or in combination, in amounts less than 5 percent or any substance containing essential secondary nutrients or micronutrients that is distributed for use in agriculture, silviculture, horticulture, and land reclamation activities for the purpose of promoting plant growth.

   c. Agronomic Rate: The nitrogen requirements of a plant needed for optimal growth and production, as cited in professional publications for California or recommended by the County Agricultural Commissioner, a Certified Agronomist or Certified Soil Scientist.

   d. Applier: Person, group of persons, or company that applies biosolids for use as a soil amendment.

   e. Arid: Arid lands are those areas where the long term annual average rainfall is below 250 millimeters (less than 10 inches).

   f. Biosolids: Sewage sludge that has been treated and tested and shown to be capable of being beneficially and legally used as a soil amendment for agriculture, silviculture, horticulture, and land reclamation activities as specified under 40 CFR Part 503.

   g. Buffer Zones: An area of land that provides a separation distance between the land application site and an area of concern.

   h. Class A Biosolids: Biosolids meeting the vector attraction, and meeting pollution concentration limits specified in 40 CFR Part 503 and pathogen reduction standards specified in 40 CFR Part 503.32(a).

   i. Class B Biosolids: Biosolids meeting the vector attraction and meeting pollution concentration limits specified in 40 CFR Part 503 and pathogen reduction standards specified in 40 CFR Part 503.32(b).

   j. Depth to Ground Water: The distance from the land surface elevation to the seasonal high water table.

   k. Domestic Water Supply Well: A well that provides water used for human consumption.

   l. EQ Biosolids: Biosolids which meet metals standards, Class A pathogen reduction standards, and vector attraction reduction standards contained in

40 CFR Part 503.13 (Table 3), 40 CFR Part 503.32, and 40 CFR Part 503.33, respectively.

m. Fallow: Fallow lands are areas that have not been cultivated during the growing season but do not include areas that have been tilled, disked, or otherwise distributed to control weeds or conserve soil moisture during such season.

n. Fertilizing Material: Biosolids with 5 percent or more of nitrogen, available phosphoric acid, or soluble potash, singly or in combination.

o. Generator: Municipal Wastewater Treatment Facility or Sewage Sludge Treatment Facility.

p. Grower: Person or entity primarily responsible for planting, maintaining, and harvesting or allowing the use of crops and/or range land for domestic animal or human use.

q. Gully erosion: Erosion cut by a concentrated but intermittent flow of water usually during and immediately following heavy rains or after ice/snow melt. A gully generally is an obstacle to wheeled vehicles and too deep (e.g., > 0.5 meter) to be obliterated by ordinary tillage.

r. High Potential for Public Exposure Areas: Land located within one-half mile of educational facilities, facilities designated for recreational activities other than hunting, fishing, or wildlife conservation, places of public assembly, hospitals, or similar sensitive receptors.

s. Horticulture: The practice, science, or art of cultivating the soil to produce fruit, vegetables, or ornamental plants for human use.

t. Key Operating Personnel: Those individuals responsible for the oversight of daily operations, management decisions, and planning of biosolids land application projects.

u. Low Potential for Public Exposure Areas: Land not meeting the definition of High Potential for Public Exposure Areas.

v. Label: The display of all written, printed, or graphic matter on the immediate container of, or a statement including the guaranteed analysis, accompanying fertilizing material as required by the California Department of Food and Agriculture.

w. Land Reclamation: The practice of revitalizing or restoring lands that are damaged from past or present human land use practices.

x. Long-Term Storage Facility: Site which holds biosolids for more than seven days consecutively.

y. Micronutrients: Refers to boron, chloride, cobalt, copper, iron, manganese, molybdenum, sodium, or zinc.

z. Municipal Wastewater Treatment Facilities (treatment facilities): Facilities designed to collect and treat wastewater generated from primarily domestic sources for environmentally safe reuse or disposal.

aa. Notice of Applicability: Written notice that a biosolids land application site is required to comply with the provisions of this General Order and that applications according to the General Order may commence.

ab. Notice of Intent (NOI): Application for coverage under this General Order, as attached. The NOI is also a notification form for the public and interested parties for this General Order.

ac. Notice of Termination (NOT): Request form to discontinue coverage of this General Order.

ad. Nuisance: Nuisance means anything which meets all of the following requirements:

(1) Is injurious to health, or is indecent and offensive to the sense, or is an obstruction to the free use of property so as to interfere with the comfortable enjoyment of life and property.

(2) Affects at the same time an entire community or neighborhood or any considerable number of persons, although the extent of the annoyance or damage inflicted upon individuals may be unequal.

(3) Occurs during, or as a result of, the treatment or disposal of wastes.

ae. Pathogens: Disease causing agents including helminths, bacteria, viruses, and protozoa.

af. Pathogen Reduction: Process used to destroy pathogenic material contained in sewage sludge.

ag. Pollution: Means an alteration of the quality of the waters of the State by waste to a degree which unreasonably affects either of the following:

(1) The waters for beneficial uses.

(2) Facilities which serve these beneficial uses.

ah. Secondary Nutrients: The elements of calcium, magnesium, and sulfur.

ai. Septage: Waste material removed from a septic tank, cesspool, portable toilet, Type III marine sanitation device, or similar wastewater handling device that has not passed through a municipal wastewater treatment facility.

aj. Sewage Sludge: The solid, semisolid, or liquid residue generated during the treatment of domestic sewage in a municipal wastewater treatment facility. Sewage sludge includes solids removed or used during primary, secondary, or advanced wastewater treatment processes. Sewage sludge does not include grit

or screening material generated during preliminary treatment of domestic sewage at a municipal wastewater treatment facility.

ak. Short-Term Storage: Biosolids storage sites used as a temporary holding facility for less than or equal to seven days.

al. Silviculture: The practice, science, or art of managing, developing, and harvesting forests and trees for human use.

am. Soil Amendment: Applications of a fertilizing material or agricultural mineral for the purpose of promoting utilization by plants and other living organisms with the goal of a net gain in soil productivity.

an. Staging Area: Area used to hold biosolids for less than 48 hours prior to use for the specified activity listed in the NOI.

ao. Tailwater: Excess water from crop irrigation resulting in a discharge off site to a surface water body.

ap. Vector Attraction: Characteristic of biosolids that attracts potential pathogen transmitters such as flies, rodents, and other animals or organisms.

aq. Water-saturated soil: Water content of the soil such that any further addition of water will result in runoff, standing water, or percolation of water through the displacement of existing soil water.

4. Treatment facilities serve urban and suburban population areas by collecting and treating municipal wastewater and reusing or disposing of wastewater effluent. While serving the public in this manner, significant amounts of sewage sludge are generated. This material is typically further treated (stabilized) and dewatered resulting in biosolids as a product of the wastewater treatment process. Biosolids can be managed using a variety of options including: (a) disposal in a sanitary landfill, (b) incineration, (c) placement into a landfill dedicated for this purpose, (d) use as daily landfill cover, and (e) use in land application operations, including reclamation, horticulture, agriculture, and silviculture. As population increases and technological improvements in wastewater treatment processes occur, the amount of biosolids generated in California is likely to increase significantly.

5. Particularly in urban areas, industrial sources discharge into wastewater collection systems. Many of these discharges are regulated by pretreatment programs implemented pursuant to 40 CFR Part 403. These programs restrict industries from discharging toxic pollutants in concentrations creating concerns for the treatment facilities.

6. As a result of domestic and industrial uses, pollutants enter the collection system of treatment facilities. The majority of the pollutant load treated at the treatment facilities is organic matter. This material is removed through flotation and/or settling or is converted to biological solids and then removed through settling prior to discharge. The settled material is then further treated to stabilize organic matter which constitutes the majority of the domestic sewage sludge. Metals from domestic and industrial sources are also present in the waste stream at the treatment facility. These pollutants are removed from the waste stream and concentrated in

the sewage sludge. Organic chemicals can also be present from domestic and industrial uses of water. The fate of these pollutants is variable. Some are removed and destroyed through physical and biological processes at the treatment facility. Others may concentrate in the sewage sludge. Some pass through the treatment facilities unchanged and are subsequently discharged from the treatment process. A portion of the organic chemicals concentrated in the sewage sludge is degraded during sludge stabilization processes. Some organic chemicals can remain in the sewage sludge unchanged. For these reasons, testing of sewage sludge is necessary prior to it being classified as biosolids.

7. Biosolids are a source of organic matter, nitrogen, phosphorus, and micronutrients. These materials are beneficial to agriculture, silviculture, horticulture, and land reclamation activities and they improve agricultural productivity. More specifically, the benefits derived from biosolids used as a soil amendment are as follows:

    a. Nitrogen is a basic nutrient for plant growth. In biosolids, it is present in the forms of ammonia, nitrates, and organic nitrogen at concentrations from two to 10 percent by weight on a dry weight basis. The ammonia and nitrate forms of nitrogen are available for plant usage. Organic nitrogen is release slowly (mineralized) over many months, providing a continuous supply of nitrogen for crops and minimizing the potential for movement of nitrogen to the ground water. Ammonium and nitrate (and some nitrite) are the available forms of nitrogen that are taken up by the plants and some form salt reserves and mineralized organic nitrogen in the soil. Total nitrogen available to the plant at any given time is less than the total of these mineral forms due to the dynamic cycling of nitrogen in the soil.

    b. Phosphorus is a basic nutrient for plant growth and is present in all biosolids in varying concentrations.

    c. Micronutrients, including a variety of salts and metals, are necessary for plant growth and are present in biosolids in varying amounts.

    d. The addition of biosolids to soils can also be beneficial by enhancing soil structure, increasing water retention capability, promoting soil aggregation, and reducing the bulk density. Organic matter assists in maintaining soil pores which allow water and air to pass through the soil medium. Such pores can be lost at sites under continuous cultivation and they are critical in maintaining an aerobic environment within the plant root zone.

    e. Organic matter helps soils retain water. Additional water retention can reduce the need for frequent water applications and can facilitate water conservation in the soil column.

    f. Liming agents are available when the biosolids have been chemically stabilized with lime. Liming agents increase soil pH and can improve the permeability of the soils. Higher pH soils have a greater propensity to bind most heavy metals, decreasing the chance of the metals migrating to the ground water.

8. Biosolids have the following characteristics which can create water quality and public health problems if improperly treated, managed, and regulated during use as a soil amendment:

   a. Pathogens can be present. Unless the biosolids are specially treated or disinfected to destroy pathogens, significant concentrations of bacteria, viruses, and parasites can remain. Public health problems can be prevented with appropriate control over public access to the application areas and restrictions on the type and use of crops grown on the application sites. Buffer zones around water supply wells, surface water drainage courses, and public areas are designated to prevent transmission of pathogens to the public.

   b. Heavy metals will be present. If heavy metals are over-applied to a field, they can cause ground water pollution, toxicity to plants, toxicity/adverse effects to soil microorganisms, or buildup in the plant tissues. A buildup of metals in plant tissues may allow transmission of the metals into the food chain which is the cause of toxicity/adverse effects to animals eating plants or animals containing elevated metals. Future cropping or other land uses could be restricted. Only some of the metals commonly found in biosolids are known to cause water quality or public health problems. Application rates for those metals have been established to avoid the problems.

   c. Nitrogen can be over-applied, allowing a buildup of nitrogen in soils. Excess nitrogen will eventually be converted to the nitrate form and it can migrate to ground water. Excess nitrate in the ground water can result in the exceedance of drinking water standards and a public health threat. Nitrogen over-application can be prevented by biosolids application at an agronomic rate, that is, by matching the application rate of the nitrogen to the nitrogen usage rate of the crops and to soil permeability and soil retention capability.

   d. Odor and insect nuisances can be caused if the biosolids have not been adequately treated (stabilized) prior to application or if wet biosolids are allowed to remain on the ground surface for several days. Compliance with State and federal standards for stabilization of the biosolids will minimize the potential for odors and insect nuisances. Proper management at the application site will prevent odor or insect nuisances. Properly stabilized biosolids will generate limited, transient odors in the immediate vicinity of the application operations. Adequate buffer zones around residences and public areas, therefore, should be provided.

   e. Discharge of organic matter, metals, and pathogens to surface waters can affect water quality. These effects can be prevented by controlling field runoff. The water quality threat of organic matter of biosolids origin affecting surface water is no greater than for a similar quantity of other organic soil amendments.

9. The U. S. Environmental Protection Agency (USEPA) has promulgated 40 CFR Part 503 for the use of biosolids as a soil amendment. These regulations establish ceiling concentrations for metals and pathogen and vector attraction reduction standards; management criteria for the protection of water quality and public health; and annual and cumulative discharge limitations of persistent pollutants, such as heavy metals, to land for the protection of livestock, crop, and

human health and water quality protection. The requirements of 40 CFR Part 503 are based on a risk-based evaluation using 14 different pathways.

10. The National Research Council established a committee to review the methods and procedures used by the USEPA while forming the basis of the 40 CFR Part 503. The National Research Council's members are drawn from the National Academy of Sciences, National Academy of Engineering, and the Institute of Medicine. Committee members included university professors from the schools of law, science, and agriculture; a state health official; a food industry professional; a professional from a sanitation agency; and a professional consultant. After a three-year study (starting in 1993), the committee made some recommendations for improvement of the regulations and data from which they are based but also stated: "Established numerical limits on concentration levels of pollutants added to cropland by sludge are adequate to assure the safety of crops produced for human consumption." As a result of the peer review, monitoring for organic chemicals and using fecal coliform testing as a parameter for determining Class A level pathogen reductions is included in this General Order.

11. This General Order establishes a regulatory system to manage biosolids in a manner that is reasonably protective of public health and the environment to the extent of present scientific knowledge. The beneficial use of biosolids through land application under this General Order is environmentally sound and preferable to non-beneficial disposal.

12. Due to the extensive work done by the USEPA, this General Order is using the 40 CFR Part 503 requirements as baseline requirements for compliance. However, this General Order is applicable to sites where biosolids are applied to land and is not intended to solely regulate the generator (unless the generator is also the landowner or land applier). The 40 CFR Part 503 permit requirements are only intended for and enforceable against the generator. Therefore, this General Order does not constitute compliance with 40 CFR Part 503. Since the SWRCB is not delegated with authority for the Federal Biosolids Program, the USEPA is the only authority to determine compliance with 40 CFR Part 503.

13. Each discharger covered by this General Order shall submit an application fee equal to the annual fee, pursuant to CWC section 13260. The amount of the fee is currently determined by the type of order issued, the threat to water quality, and complexity of the specific discharge, as detailed in Section 2200, Chapter 9, Division 3, Title 23, California Code of Regulations (CCR). Biosolids application projects greater than or equal to 40 acres are deemed as Non-Chapter 15 WDRs with a Category "II" threat to water quality rating and a Category "b" complexity rating. Biosolids projects consisting of less than 40 acres are deemed Category "III" threat to water quality rating and a Category "b" complexity rating.

14. This General Order may be periodically revised to reflect changes in federal or State laws or regulations or policies of the SWRCB or RWQCB.

15. Under CWC section 13263, the SWRCB can prescribe General WDRs for categories of discharges which involve the same or similar waste type or those which are produced by the same or similar operations.

16. This General Order shall primarily apply to both the landowner of sites using biosolids and the biosolids generator, but may also include, as determined by those involved in the operation, the individuals, or companies, transporting and placing the biosolids in the field and the land lessee in conjunction with the landowner and the generator. To obtain coverage under the General Order, a complete NOI and an appropriate fee must be submitted to the RWQCB. Once a completed application is submitted, RWQCB staff will evaluate the project to determine if it is suitable for regulation under this General Order and the corresponding California Environmental Quality Act (CEQA) document. Only after a determination of applicability is made will the discharger be issued a Notice of Applicability by the RWQCB Executive Officer. Only applicants (dischargers) who submit a complete NOI, appropriate fee, and are issued a Notice of Applicability are authorized to land apply biosolids at an agricultural, horticultural, silvicultural, or land reclamation site as a soil amendment onto the land specified in the NOI in compliance with the terms and conditions of this General Order. If it is determined that a local agency already adequately regulates the activity subject to this permit, the RWQCB may choose not to issue this General Order in order to avoid any duplicative regulation.

17. A separate NOI and filing fee must be filed for each biosolids use project to be eligible for coverage under this General Order. A separate NOI and filing fee must be filed for each landowner involved in a reuse project. Attachment A to this General Order contains an NOI form which details the minimum contents of the NOI. A single reuse project will be limited to sites comprising not more than 2,000 net acres available for application. Net acreage is the land available for application, excluding roads, surface water drainage, and required buffer areas. The sites comprising a single reuse project shall be contained within a ten-mile radius of a given location. There is no restriction on the number of NOIs which may be filed for reuse within any geographic area. A single reuse project may be a one-time application or may be repetitive applications to the same parcel. Filing fees are annual fees. Projects will be billed for an annual fee equaling the filing fee until the project is completed and coverage under the General Order has been terminated.

18. As a condition for the review of each individual NOI submitted for a proposed biosolids application project under the GO, the RWQCB staff responsible for issuing the NOA will:

    a. evaluate whether the proposed discharge will occur within an area designated as having existing nitrate contamination problems and

    b. evaluate whether the proposed discharge will pose an imminent threat of contributing to or causing exceedances of water quality standards for nitrate.

19. As a result of the review discussed in Finding No.17 , if the responsible RWQCB staff finds that either condition exists, the RWQCB staff will minimize the potential water quality impacts of the project by requiring the applicant to modify the proposed discharge activities or provide additional information to verify that the proposed discharge will not cause or contribute to violations of water quality standards. Verification that the proposed project will not cause or contribute to water quality degradation will require that sufficient information be submitted by a qualified civil engineer, agricultural engineer, professional hydrogeologist or other

qualified professional such that the RWQCB staff could make a finding that the proposed discharge will be in compliance with provisions of the GO. If the RWQCB staff finds that modifications to the proposed discharge are necessary for compliance with provisions of the GO, such modifications will consider, but will not be limited to, the following:

a. requirements for the discharger to use the services of a certified agronomist, crop advisor, or agricultural engineer to develop additional management practices related to: 1) determining the agronomic rate for biosolids application projects that include all sources of nitrogen applied to the application site; 2) developing overall farm water, cropping, and fertility management practices; and 3) evaluating the potential for nitrate leaching or impairment of offsite groundwater use;

b. requirements of the discharger to provide additional groundwater monitoring in areas where groundwater is found at depths greater than 25 feet or there exist other identified local hydrogeologic conditions that could make the groundwater susceptible to contamination;

c. requirements of the discharger to identify whether the proposed biosolids application site is within an area where Drinking Water Source Water Assessment and Protection (DWSWAP) Program setback requirements are implemented for municipal and domestic wells; and

d. requirements of the discharger to consider the unique local site and hydrogeologic conditions in the design of the project and/or other groundwater quality management or regulatory programs that are currently active in the area.

20. This General Order sets minimum standards for the use of biosolids as agricultural, horticultural, silvicultural, or reclamation site soil amendments, and it does not preempt or supersede the authority of local agencies to prohibit, restrict, or control the use of biosolids subject to their control, as allowed under current law. It is the responsibility of the discharger to make inquiry and to obtain any local governmental agency permits or authorizations prior to the application of biosolids at each site.

21. Some areas in California have been designated as unique and valuable public resources. Such areas have been defined in the State law and the CCR as jurisdictional waters or preserves or have been addressed through acts specifically intended to preserve and manage the resource. This General Order is not applicable to those areas as described below:

a. The Lake Tahoe Basin.

b. The Santa Monica Mountains Zone as defined by section 33105 of the Government Code.

c. The California Coastal Zone, as defined in and mapped pursuant to Public Resources Code (PRC) section 30103.

d. An area within one quarter mile of a wild and scenic river, as defined by PRC section 5093.5.

e. The Sacramento-San Joaquin Delta, as defined in CWC section 12220.

f. The Suisun Marsh, as defined in (PRC) section 29101.

g. The jurisdiction of the San Francisco Bay Conservation and Development Commission, as defined in Government Code section 66610.

h. The following prohibition areas contained in the Water Quality Control Plan[1] of the Lahontan RWQCB:

(1) Glenshire and Devonshire Subdivisions, Town of Truckee

(2) Areas southwest of Piute Creek and north of Susan River and included in Sections 21, 25, 26, 27, 28, 33, 34, 35, and 36, T30N, R11E, MDB&M

(3) Eagle Lake Basin-Spaulding Tract, Stones-Bengard Subdivision, and Eagle's Nest Summer Home Tract

(4) Mono-Owens Planning Area

(a) Rush Creek Watershed above the outlet of Grant Lake

(b) Mammoth Creek Watershed, including the drainage area of the community of Mammoth Lake, and the Sherwin Creek Watershed upstream of the confluence of Sherwin and Mammoth Creeks

(c) Inyo County Service Area No. 1

i. Assessment District No. 1
ii. Assessment District No. 2
iii. Rocking K Subdivision
iv. City of Bishop

(5) Antelope Valley Planning Area

(a) The Antelope Hydrologic Unit above an elevation of 3,500 feet

(6) Mojave River Planning Area

(a) The Silverwood Lake Watershed

(b) The Deep Creek Watershed above an elevation of 3,200 feet

(c) The Grass Valley Creek Watershed above an elevation of 3,200 feet

[1] A detailed description of the prohibition areas can be found in the Lahontan RWQCB's Water Quality Control Plan (Basin Plan)

(d) Area north of State Highway 18 within the area commonly known as Apple Valley and Desert Knolls

(7) Hilton Creek/Crowley Lake communities

22. The biosolids applied to land under this General Order are non-hazardous decomposable wastes applied as a soil amendment pursuant to best management practices and, as such, are exempt from the requirements of Title 23, CCR, Section 2510, et seq., (Chapter 15), in accordance with Section 2511(f).

23. The construction and use of biosolids storage facilities allowed by this General Order are for short-term storage of biosolids in the event that biosolids cannot be immediately applied to the ground surface because of an unanticipated event, such as mechanical breakdown of equipment or an unseasonable rainstorm. Because of the short period of storage allowed by this General Order, the stockpiled biosolids are not a threat to the quality of underlying ground water; thus, the storage basins need not be regulated as either a waste pile or surface impoundment under Title 27 of the CCR. If long-term storage is proposed, the discharger will need to apply for a separate WDR for the long-term biosolids storage facility. Biosolids application to land associated with a project using a permitted long-term biosolids storage basin may be conducted under this General Order, if appropriate.

24. Ground water and surface waters of California have been evaluated for their maximum potential beneficial uses. Those use categories are discussed below:

a. The designated beneficial uses of surface waters within the State are:

(1) Municipal Supply (MUN)
(2) Agricultural Supply (AGR)
(3) Aquaculture (AQUA)
(4) Fresh Water Replenishment of Salton Sea (FRSH)
(5) Industrial Service Supply (IND)
(6) Ground Water Recharge (GWR)
(7) Water Contact Recreation (REC I)
(8) Noncontact Water Recreation (REC II)
(9) Warm Water Habitat (WARM)
(10) Cold Freshwater Habitat (COLD)
(11) Wildlife Habitat (WILD)
(12) Hydropower Generation (POW)
(13) Preservation of Rare, Endangered, or Threatened Species (RARE)

b. The designated beneficial uses of ground waters in California are:

(1) MUN
(2) IND
(3) AGR
(4) AQUA
(5) WILD

Some ground water and surface waters have fewer beneficial uses. Beneficial uses for specific water bodies can be found in the applicable RWQCB's Water Quality Control Plan (Basin Plan).

25. On July 22, 2004, in accordance with CEQA (PRC, Section 21000, et seq.), the SWRCB adopted a Mitigated Environmental Impact Report No. 99062108 for these General WDRs.

26. The SWRCB has notified all known interested agencies and persons of its intent to prescribe General WDRs for the reuse of biosolids as a soil amendment and has provided them with an opportunity for a public hearing and an opportunity to submit comments.

27. The SWRCB, in public meetings on March 2 and July 7, 2004, heard and considered all comments pertaining to the General Order.

28. Amendments to this General Order have been evaluated by the SWRCB in light of the Environmental Impact Report just certified and the substantial evidence before the Board, and the SWRCB finds such amendments to be consistent with the analysis contained therein. The SWRCB finds that there will be no additional potentially significant environmental impacts or substantial increase in the severity of previously disclosed environmental impacts caused by the amendments to the General Order.

IT IS HEREBY ORDERED that all dischargers that file an NOI indicating their intention to be regulated under provisions of this General Order, and all heirs, successors, or designees, in order to meet the provisions contained in Division 7 of CWC and regulations adopted thereunder, shall comply with the following:

A. PROHIBITIONS

1. The discharge of biosolids is prohibited unless the discharger has submitted an NOI, filing fee, and a pre-application report and in response to these submittals, the RWQCB has issued a Notice of Applicability, individual WDRs, or a waiver of WDRs for the discharge.

2. Applications of biosolids shall be confined to the designated use areas stated and shown in the NOI and pre-application report.

3. The discharge shall not cause or threaten to cause pollution, as defined in CWC section 13050.

4. The application of any material that results in a violation of the Safe Drinking Water and Toxic Enforcement Act (Health and Safety Code section 25249.5) is prohibited.

5. The storage, transport, or application of biosolids shall not cause a nuisance, as defined in CWC section 13050.

6. There shall be no discharge of biosolids from the storage or application areas to adjacent land areas not regulated by this General Order, to surface waters, or to surface water drainage courses.

7. From the permitted site, irrigation water runoff is prohibited for 30 days after application of biosolids if vegetation in the application area and along the path of runoff does not provide 33 feet of unmowed grass or similar vegetation to prevent the movement of biosolids from the application site.

8. Application of biosolids at rates in excess of the nitrogen requirements of the vegetation or at rates that would degrade ground water is prohibited except as allowed by Prohibition A.9.

9. Application of biosolids at rates in excess of the nitrogen requirements of the vegetation may be allowed for soil reclamation projects (as defined by land reclamation on page 4) as part of an overall plan for reclamation of sites (such as abandoned mine tailings and gravel quarries), provided the discharger can demonstrate that the application of excess nitrogen will not result in unacceptable degradation of underlying ground waters. A report prepared by a Certified Agronomist, Certified Soil Scientist, Registered Agricultural Engineer, or Registered Civil Engineer providing this demonstration shall be submitted to and approved by the RWQCB Executive Officer prior to the application of biosolids to reclamation sites at greater than agronomic rates.

10. The discharge of biosolids except as allowed for authorized storage, processing, and application sites is prohibited.

11. The application of "hazardous waste," as defined in Chapter 11, Division 4.5, Title 22 of the CCR, is prohibited.

12. Discharge of biosolids with pollutant concentrations greater than those shown below is prohibited.

	Ceiling Concentration
Constituent	mg/kg dry weight
Arsenic	75
Cadmium	85
Copper	4300
Lead	840
Mercury	57
Molybdenum	75
Nickel	420
Selenium	100
Zinc	7,500

13. The application of biosolids to water-saturated or frozen ground or during periods of precipitation that induces runoff from the permitted site is prohibited.

14. The application of Class B biosolids containing a moisture content of less than 50 percent is prohibited.

15. The application of biosolids in areas where biosolids are subject to gully erosion or washout off site is prohibited.

16. The application of biosolids to slopes exceeding 25 percent is prohibited.

B. DISCHARGE SPECIFICATIONS

1. All biosolids subject to this General Order shall comply with the applicable pathogen reduction standards listed in 40 CFR Part 503.32. In addition to those standards, all biosolids meeting Class A standards shall not have a maximum fecal coliform concentration greater than 1,000 most probable number (MPN) per gram of biosolids; or the density of salmonella, sp.[2] shall not be greater than three MPN per four grams.

2. All biosolids subject to this order shall comply with one of the applicable vector attraction reduction requirements specified in 40 CFR Part 503.33.

3. Biosolids application rates shall not exceed the agronomic rate for nitrogen for the crop being planted except as allowed by Prohibition No. 9 or for biosolids research projects.

4. Biosolids less than 75% moisture shall not be applied during periods when the surface wind speed exceeds 25 miles per hour as determined by the nearest calibrated regional weather station (e.g., airport, CIMS).

5. Biosolids shall not be applied in amounts exceeding the Risk Assessment Acceptable Soil Concentration as described below:

$$BC = RP - 1.8(BS)$$

Where: BC= Background Cumulative Adjusted Loading Rate (Lbs./Acre)
RP = 40 CFR Part 503 Cumulative Pollutant Loading Rate (Lbs./Acre)
BS = Actual Site Background Site Soil Concentration (mg/Kg)

And Where the Values for RP on a pollutant specific basis are given below:

Pollutant	Cumulative Pollutant Loading Rate (RP) (Lbs./Acre)
Arsenic	36
Cadmium	34
Copper	1336
Lead	267

[2] As determined by a USEPA approved method other than a method listed in "Standard Methods for the Examination of Water and Wastewater" 18th Edition, 1992, American Public Health Association, 1015 15th Street, NW., Washington, DC 2005; and other than the method found in Kenner, B. A. and H. P. Clark, "Detection and Enumeration of Salmonella and Pseudomonas aeruginosa," Journal of Water Pollution Control Federation, Vol. 46, No. 9, September 1974, pp. 2163-2171. Water Environment Federation, 601 Wythe Street, Alexandria, VA 22314.

Mercury	15
Molybdenum[3]	16
Nickel	374
Selenium	89
Zinc	2,494

6. If biosolids are applied to a site where the soil will be tilled, biosolids shall be incorporated within 24 hours after application in arid areas and in non-arid areas during the time period beginning May 1 and ending October 31 and within 48 hours in non-arid areas during the remaining time period.

7. Grazing of domesticated animals at sites where biosolids applications have occurred will be restricted until the necessary waiting period has elapsed. Such grazing shall be deferred for at least 60 days after application of biosolids in areas with average daily (daytime) air temperatures exceeding 50ºF or be deferred for at least 90 days after land application where such conditions are not met.

8. If biosolids are applied to ground surfaces having a slope greater than ten percent (10%) or if required by the RWQCB Executive Officer, a report, including an erosion control plan, shall be prepared by a Certified Soil Scientist, Certified Agronomist, Registered Agricultural Engineer, Registered Civil Engineer, or a Certified Professional Erosion and Sediment Control Specialist and submitted to the RWQCB for approval with the NOI. This report shall describe the site conditions that justify application of biosolids to the steeper slopes and shall specify the application and management practices necessary (a) to assure containment of the biosolids on the application site and (b) to prevent soil erosion. The discharger shall comply with any approved erosion control plan submitted to the RWQCB.

9. Structures conveying tail water shall be designed and maintained to minimize any field erosion. Tail water structures shall be boarded and wrapped with plastic prior to any biosolids application but removed after biosolids incorporation into the soil.

10. Biosolids distinguished as "Class B" in 40 CFR Part 503 must comply with the following:

    a. The discharge of tail water or field runoff is prohibited within 30 days after application of biosolids for areas where biosolids have not been incorporated into the soil and where there is not a minimum of 33 feet[4] of unmowed grass or similar vegetation bordering the application area and along the path of runoff to prevent movement of biosolids particles from the application site.

    b. After an application of biosolids in any field, the discharger shall ensure the following:

[3] Currently the USEPA has not established a value for the limitation of molybdenum. Should the USEPA establish such a cumulative pollutant limitation in 40 CFR Part 503, that limit will preempt the limit specified for molybdenum.

[4] For sites where the topography slopes are greater than 10 percent, the minimum width of vegetative border shall be proposed in accordance to Discharge Specification No. 8 above.

(1) For at least 30 days:

(a) Food, feed, and fiber crops are not harvested.

(2) For at least 60 days after application of biosolids in areas with average daily (daytime) air temperatures exceeding 50ºF or for at least 90 days after land application where such conditions are not met:

(a) Domesticated Animals are not grazed.

(3) For at least 12 months:

(a) Public access to the site is restricted for sites with a high potential for public exposure;
(b) Turf is not to be harvested if the harvested turf is placed on land with a high potential for contact by the public as defined in 40 CFR Part 503.11; and
(c) Grazing of milking animals used for producing unpasteurized milk for human consumption is prevented if the field is used as pasture.

(4) For at least 14 months:

Food crops with harvested parts that touch the biosolids/soil mixture and are totally above the land surface are not harvested.

(5) For at least 20 months:

Food crops with harvested parts below the land surface are not harvested when the biosolids remain exposed on the surface for four months or longer prior to incorporation.

(6) For at least 38 months:

Food crops with harvested parts below the land surface are not harvested when the biosolids remained exposed on the ground surface for less than four months prior to incorporation into the soil.

11. Staging and biosolids application areas shall be at least:

a. 10 feet from property lines[5],
b. 500 feet from domestic water supply wells[6],
c. 100 feet from non-domestic water supply wells[7],

[5] This requirement may be waived when property lines are adjacent to properties also using biosolids as a soil amendment.

[6] A lesser setback distance from domestic water supply wells (not to be less than 100 feet) may be used if the discharger can demonstrate to the Executive Officer that the ground water, geologic, topographic, and well construction conditions at the specific site are adequate to protect the health of individuals using the supply well.

[7] A lesser setback distance (not to be less than 25 feet) may be used if the discharger can demonstrate to the RWQCB Executive Officer that the ground water, geologic, topographic, and well construction conditions at the specific site are adequate to protect the ground water. Not including agricultural drains.

d. 50 feet from public roads and occupied onsite residences,
e. 100 feet from surface waters, including wetlands, creeks, ponds, lakes, underground aqueducts, and marshes,
f. 33 feet from primary agricultural drainage ways,
g. 500 feet from occupied non-agricultural buildings and off-site residences[8],
h. 400 feet from a domestic water supply reservoir,
i. 200 feet from a primary tributary to a domestic water supply,
j. 2,500 feet from any domestic surface water supply intake, and
k. 500 feet from enclosed water bodies that could be occupied by pupfish.

12. Operators that produce land applied biosolids are to follow the recommendations contained in ISCORS's November 2003 draft report entitled "Assessment of Radioactivity in Sewage Sludge: Recommendations on Management of Radioactive Materials in Sewage Sludge and Ash in Publicly Owned Treatment Works" (ISCORS Technical Report 2003-04), for screening, identification, and consultation.

C. BIOSOLIDS STORAGE AND TRANSPORTATION SPECIFICATIONS

Biosolids shall be considered to be "stored" if they are placed on the ground or in non-mobile containers (i.e., not in a truck or trailer) at the application site or an intermediate storage location away from the generator/processing for more than 48 hours. Biosolids shall be considered to be "staged" if placed on the ground for brief periods of time solely to facilitate transfer of the biosolids between transportation and application vehicles.

1. Biosolids shall not be stored for more than seven (7) consecutive days prior to application.

2. Biosolids containing free liquids shall not be placed on the ground prior to application on an approved site, excluding equipment cleaning operations.

3. Biosolids shall not be stored directly on the ground at any one location for more than seven (7) consecutive days.

4. Sites for the storage of Class B biosolids shall be located, designed, and maintained to restrict public access to the biosolids.

5. Biosolids storage facilities that contain biosolids between October 1 and April 30 shall be designed and maintained to prevent washout or inundation from a storm or flood with a return frequency of 100 years.

6. Biosolids placed on site for more than 24 hours shall be covered.

7. Biosolids storage facilities shall be designed, maintained, and operated to minimize the generation of leachate and the effects of erosion.

[8] A lesser setback from non-agricultural buildings and off-site residences (not less than 100 feet) may be allowed by the Executive Officer provided that a lesser setback is not initially opposed by the current resident within 500 feet.

8. If biosolids are to be stored at the site, a plan describing the storage program and means of complying with this General Order shall be submitted for RWQCB Executive Officer approval with the NOI. The storage plan shall also include an adverse weather plan.

9. The discharger shall operate the biosolids storage facilities in accordance with the approved biosolids storage plan.

10. The discharger shall immediately remove and relocate any biosolids stored or applied on site in violation of this General Order.

11. All biosolids shall be transported in covered vehicles capable of containing the designated load.

12. No application of Class B biosolids shall be permitted within an area defined in the General Order as having a high potential for public exposure unless the biosolids are injected into the soil.

13. All biosolids having a water content that is capable of leaching liquids shall be transported in leak proof vehicles.

14. Each biosolids transport driver shall be trained as to the nature of its load and the proper response to accidents or spill events and shall carry a copy of an approved spill response plan.

15. The discharger shall avoid the use of haul routes near residential land uses to the extent possible. If the use of haul routes near residential land uses cannot be avoided, the discharger shall limit project-related truck traffic to daylight hours.

D. PROVISIONS

1. To obtain coverage under this General Order and terminate coverage thereof, the following must take place:

   a. Coverage:

      A complete NOI form and filing fee must be filed by the discharger for each proposed application site covered by these General WDRs. The NOI form may be modified by the RWQCB Executive Officer as the need arises. An NOI form is attached (Attachment A) to this General Order. Coverage does not begin until a Notice of Applicability has been issued by the applicable RWQCB's Executive Officer. No discharge shall occur until 15 days after submission of the Pre-Application Report as required in the Monitoring and Reporting Program.

   b. Coverage Termination:

      (1) A biosolids application project covered by these General WDRs may be terminated by submittal of the Final Monitoring and Reporting Program technical report and a NOT, as shown on

Attachment B of these General WDRs. The discharger(s) will be responsible for paying all annual fees for coverage under these General WDRs until approval of the NOT is granted by the RWQCB Executive Officer. For sites using Class B biosolids, termination shall not take place until 38 months after the last Class B biosolids application. The NOT form may be modified by the RWQCB Executive Officer as the need arises.

(2) If an individual WDR Order is issued to the discharger for a project covered by this General Order, the applicability of this General Order to the discharger is automatically terminated on the effective date of the individual WDR Order.

2. Where ground water monitoring is required, as specified by the RWQCB Executive Officer or as contained in Monitoring and Reporting Program, the ground water monitoring program must be in place prior to any application of biosolids.

3. A cultural resources investigation shall be conducted before any disturbance of land that has not been disturbed previously. The cultural resources investigation will include, at a minimum, a records search for previously identified cultural resources and previously conducted cultural resources investigations of the project parcel and vicinity. This record search will include, at a minimum, contacting the appropriate information center of the California Historical Resources Information System, operated under the auspices of the California Office of Historic Preservation. In coordination with the information center or a qualified archaeologist, a determination shall be made regarding whether previously identified cultural resources will be affected by the proposed project and if previously conducted investigations were performed to satisfy the requirements of CEQA. If not, a cultural resources survey shall be conducted. The purpose of this investigation will be to identify resources before they are affected by a proposed project and avoid the impact. If the impact is unavoidable, mitigation will be determined on a case-by-case basis, as warranted.

4. The Discharger shall comply with State laws regarding disposition of Native American burials if such remains are found. If human remains of Native American origin are discovered during project activities, the discharger shall comply with State laws relating to the disposition of Native American burials, which are under the jurisdiction of the Native American Heritage Commission (Pub. Res. Code Section 5097). If human remains are discovered or recognized in any location other than a dedicated cemetery (six or more human burials at one location constitute a cemetery [Section 8100], excavation or disturbance of the site or any nearby area reasonably suspected to overlie adjacent human remains will stop until:

   a. the county coroner has been informed of the discovery and has determined that no investigation of the cause of death is required; and

   b. if the remains are of Native American origin,

i. the descendants of the deceased Native Americans have made a recommendation to the landowner or the person responsible for the excavation work for means of treating or disposing of the human remains and any associated grave goods with appropriate dignity, as provided in Public Resources Code Section 5097.98, or

ii. the Native American Heritage Commission is unable to identify a descendant or the descendant failed to make a recommendation within 24 hours after being notified by the commission.

5. The discharger shall submit copies of each NOI to the appropriate regional office(s) of the Department of Fish and Game, local water district, City Planning Department, County Health Department(s), County Planning Department(s), and County Agricultural Commissioner(s) with jurisdiction over the proposed application site(s). Also, the discharger shall notify adjacent property owners with parcels abutting the subject land application site and, where applicable, tenants. The discharger shall submit proof to the RWQCB that all the above agencies and persons were notified. Other than compliance evaluations, the RWQCB is not responsible for the notification process. Regional Board staff will examine available records to determine if there are recorded wells at the proposed application site. No application will be permitted at the site unless the well has been properly abandoned or the set back requirements are observed.

6. The discharger shall comply with the Monitoring and Reporting Program No. 2000- which is part of this General Order and any plans required and contained within, and any revisions thereto.

7. The discharger must notify the RWQCB Executive Officer in writing at least 30 days in advance of any proposed transfer of this General Order's responsibility and coverage to a new discharger. The notice must include a new NOI for the proposed discharger, a NOT for the existing discharger, and a specific date for the transfer of this General Order's responsibility. This agreement shall include an acknowledgment that the existing discharger is liable for compliance with this General Order and for all violations up to the transfer date and that the new discharger is liable for compliance with this General Order and all violations after the transfer date.

8. Where the discharger becomes aware that it failed to submit any relevant facts in a NOI or submitted incorrect information in a NOI or in any report to the RWQCB, it shall promptly submit such facts or information.

9. The discharger shall be responsible for informing all biosolids transporters, appliers, and growers using the site of the conditions contained in this General Order.

10. The discharger must comply with all conditions of this General Order, including timely submittal of technical and monitoring reports as directed by the RWQCB Executive Officer. Violations may result in enforcement action, including RWQCB or court orders requiring corrective action or

imposing civil monetary liability or revision or rescission of the applicability of this General Order to a specific project.

11. Individuals and companies responsible for site operations retain primary responsibility for compliance with these requirements, including day-to-day operations and monitoring. Individual property owners and property managers retain primary responsibility for crop selection and any access or harvesting restrictions resulting from biosolids application. Individual owners of the real property at which the discharge will occur are ultimately responsible for ensuring compliance with these requirements. Enforcement actions for violations of this General Order may be taken against all dischargers required to comply with this General Order.

12. A copy of this General Order shall be kept at the discharge facility for reference by operating personnel. Key operating personnel shall be familiar with its contents.

13. This General Order does not convey any property rights of any sort or any exclusive privileges. The requirements prescribed herein do not authorize the commission of any act causing injury to persons or property, do not protect the discharger from his liability under federal, State, or local laws, nor do they create a vested right for the discharger to continue the waste discharge.

14. Provisions of these WDRs are severable. If any provision of these requirements is found invalid, the remainder of these requirements shall not be affected.

15. The SWRCB will review this General Order periodically and will revise requirements when necessary.

16. The discharger at all times shall properly operate and maintain all facilities and systems of treatment and control (and related appurtenances) which are installed or used by the discharger to achieve compliance with conditions of this General Order. Proper operation and maintenance includes effective performance, adequate funding, adequate operator staffing and training, and adequate laboratory and process controls, including appropriate quality assurance procedures. This provision requires the operation of backup or auxiliary facilities or similar systems only when necessary to achieve compliance with the conditions of this General Order.

17. The discharger shall allow the RWQCB or an authorized representative upon the presentation of credentials, valid identification with photograph, and other documents as may be required by law to:

    a. Enter upon the discharger's premises where a regulated facility or activity is located or conducted or where records must be kept under the conditions of this General Order;

    b. Have access to and copy, at reasonable times, any records that must be kept under the conditions of this General Order;

c. Inspect at reasonable times any facilities, equipment (including monitoring and control equipment), practices, or operations regulated or required under this General Order; and

d. Sample or monitor at reasonable times, any substances or parameters at any location for the purposes of assuring compliance with this General Order or as otherwise authorized by the CWC.

18. All monitoring instruments and devices used by the discharger to fulfill the prescribed monitoring program shall be properly maintained and calibrated as necessary to ensure their continued accuracy. All measurement devices shall be calibrated at least once per year or more frequently to ensure continued accuracy of the devices.

    Unless otherwise permitted by the RWQCB Executive Officer, all analyses shall be conducted at a laboratory certified for such analyses by the California Department of Health Services. The RWQCB Executive Officer may allow use of any uncertified laboratory under exceptional circumstances, such as when the closest laboratory to the monitoring location is outside the State boundaries and therefore is not subject to certification. All analyses shall be conducted in accordance with those methods specified in 40 CFR Part 503.8(1) through 40 CFR Part 503.8(4), 40 CFR Part 503.8(6), and 40 CFR Part 503.8(7).

19. The discharger shall report any noncompliance which may endanger human health or the environment. Any such information shall be provided orally to the RWQCB Executive Officer within 24 hours from the time the discharger becomes aware of the circumstances. A written submission shall also be provided within five days of the time the discharger becomes aware of the circumstances. The written submission shall contain (a) a description of the noncompliance and its cause; (b) the period of noncompliance, including exact dates and times; and, (c) if the noncompliance has not been corrected, the anticipated time the noncompliance is expected to continue and steps being taken or planned to reduce, eliminate, and prevent recurrence of the noncompliance with a time schedule that includes milestone dates. The RWQCB Executive Officer or an authorized representative may waive the written report on a case-by-case basis if the oral report has been received within 24 hours. Also, the discharger shall notify the Office of Emergency Services (1-800-852-7550), the State Department of Health Services, Food and Drug Branch, (916) 445-2263), and the local health department as soon as practical but within 24 hours after the incident.

20. The discharger shall retain records of all monitoring information including all calibration and maintenance records for on-site monitoring equipment (if applicable), copies of all reports required by this General Order, and records of all data used to complete the application for this General Order. Records shall be maintained for a minimum of three years from the date of the sample, measurement, report, or application. This period may be extended during the course of any unresolved litigation regarding this discharge or when requested by the RWQCB Executive Officer.

    Records of monitoring information shall include:

a. The date, exact place, and time of sampling or measurements;
b. The individual(s) who performed the sampling or measurements;
c. The date(s) analyses were performed;
d. The individual(s) who performed the analyses;
e. The analytical techniques or methods used; and
f. The results of such analyses.

21. All application reports or information to be submitted to the RWQCB Executive Officer shall be signed and certified as follows:

    a. For a corporation--by a principal executive officer or at least the level of vice president.
    b. For a partnership or sole proprietorship--by a general partner or the proprietor, respectively.
    c. For a municipality, State, federal, or other public agency--by either a principal executive officer or ranking elected official.

22. A duly authorized representative of a person designated in Provision No. 21 of this provision may sign documents if:

    a. The authorization is made in writing by a person described in Provision No. 21, above.
    b. The authorization specifies either an individual or position having responsibility for the overall operation of the regulated facility or activity; and
    c. The written authorization is submitted to the RWQCB Executive Officer.

    Any person signing a document under these Provisions shall make the following certification:

    "I certify under penalty of law that I have personally examined and am familiar with the information submitted in this document and all attachments and that, based on my inquiry of those individuals immediately responsible for obtaining the information, I believe that the information is true, accurate, and complete. I am aware that there are significant penalties for submitting false information, including the possibility of fine and imprisonment."

CERTIFICATION

The undersigned, Clerk to the Board, does hereby certify that the foregoing is a full, true, and correct copy of an order duly and regularly adopted at a meeting of the State Water Resources Control Board held on July 22, 2004.

AYE: Arthur G. Baggett, Jr.
Peter S. Silva
Richard Katz
Gary M. Carlton
Nancy H. Sutley

NO: None.

ABSENT: None.

ABSTAIN: None.

Debbie Irvin
Clerk to the Board

STATE WATER RESOURCES CONTROL BOARD
MONITORING AND REPORTING PROGRAM
GENERAL WASTE DISCHARGE REQUIREMENTS (WDRs) FOR THE DISCHARGE OF BIOSOLIDS TO LAND FOR USE IN AGRICULTURAL, SILVICULTURAL, HORTICULTURAL, AND LAND RECLAMATION ACTIVITIES

PRE-APPLICATION REPORT

As required in Provision 1.a. of the General Order, a Pre-Application Report shall be submitted for each field or distinct application area prior to the application of biosolids in accordance with the WDRs. Where biosolids are applied on a continuing basis to a single area, the Pre-Application Report may cover ongoing operations and may not need to be submitted for each load applied. A pre-application report shall be submitted 30 days prior to the date of the proposed application. The Pre-Application Report shall be signed by the owner/operator of the biosolids application operation and by the property owner. The property owner may submit written authorization to allow a representative of the property owner, such as a tenant or land management company, to sign the Pre-Application Report.

Information in the Pre-Application Report found in **bold type** is a required field to be submitted in the Pre-Application Report. Otherwise, information that was submitted in the Notice of Intent (NOI) and has not changed or will not change is not required. The following items shall be included in the Pre-Application Report and shall be submitted to the appropriate Regional Water Quality Control Board (RWQCB):

Waste Discharge Identification System No._____

This number is established at the time the initial Notice of Intent (NOI) is submitted to the RWQCB and can be obtained at the RWQCB.

1. Site Location/Applier Information-A separate Pre-Application Report must be completed for each different site.

Landowner:	
Address:	
Contact:	**Phone:**
Site Location (including address, if any):	
Nearest Cross Street(s):	
County:	**Total Size of Site:**
Section(s)/Township/Range/Meridian:	
Latitude (from field center):	**Longitude (from field center):**

Applier:	
Address:	
Contact:	**Phone:**

Attach a U.S. Geological Survey 7.5 Minute map or similar map (1:24000 or larger) showing the proposed application site and surrounding properties within 2,500 feet from site boundaries. The map should show:

a. Site topography
b. Run-on/runoff controls
c. Storage areas
d. Nearby surface waters, wells, residences, and public roads
e. Application area(s) including buffer zones (setbacks)
f. Ground water monitoring wells (if required)
g. Elevation

2. **Biosolids Source--** The section below must be completed **for each source of biosolids**. If additional space is required, copy this section and attach.

Wastewater Treatment Plant				
Mailing Address				
City	**County**	**State**	**Zip**	**Phone**
Contact Person				

Level of Pathogen Treatment: Class A_____ Class B_____
Description of vector attraction reduction achievement:
_____

3. **Constituent Concentrations (Each Source)**

Constituent	**Concentration in Biosolids, mg/kg, dry weight**
Arsenic	
Cadmium	
Copper	
Lead	
Mercury	
Molybdenum	
Nickel	
Selenium	
Zinc	
pH	
Salinity	
Total Solids Content	**%**
Total Nitrogen	
Fecal Coliform (if applicable)	**MPN/gram**

Ammonia Nitrogen, as N	
Total Phosphorus, as P	
Total Potassium	
SW 846[1] Method 8080 for PCB Aroclors, Aldrin/Dieldrin	
EPA Method 8270 Semi-Volatile Organics	

Date samples collected _____ _____
Date samples analyzed _____ _____
Attach copies of all lab reports.

4. Application Area Information

Subject	Value	Applicable Unit/ Type of Measure
Quantity of Biosolids to be Applied		
Land Use Zone		
Adjacent Land Use Zones		
Application Area Size		Acres
Proposed Nitrogen Loading		Lb. plant available nitrogen/acre
Residual Nitrogen from Previous Fertilizer and Biosolids Applications[10]		Lb. per acre
Proposed Crop, Use		
Crop Nitrogen Useage		
Nitrogen Usage Reference		
Anticipated Avg. Appl. Rate		
Avg. Annual precipitation		
Plant tissue testing for Molydenum(Mo) [11]		
Plant tissue testing for Copper(Cu)[3]		
Plant tissue testing for Selenium(Se) [3]		

Attach an anticipated annual time schedule for the field operations including anticipated biosolids applications windows, seeding operations, supplemental fertilization, and cultivation/harvest.

5. Ground Water Monitoring

For biosolids application operations where minimum depth to usable ground water[12] is less than 25 feet or as specified by the RWQCB Executive Officer and where special circumstances would warrant ground water monitoring, a ground

9 The Discharger shall use the most recent version of SW 486 methods for detecting PCB constituents and list all Aroclor concentrations with the summation of total PCBs.

10 Attach a sheet showing calculations and all assumptions used for calculating residual Nitrogen from previous fertilizer and biosolids applications.

11 The sample is a crop composite and only required where crops are used as animal feeds.

12 Usable ground water: Ground water is defined as having either an agricultural or domestic supply source as described in the RWQCB Basin Plan.

water monitoring program, at a minimum, shall consist of three monitoring wells (one up gradient, two down gradient) for each application area and shall be in place prior to any application of biosolids if the discharger intends to or does apply biosolids more than twice within a five-year period at any particular location. A report specifying location, construction, and development details of ground water monitoring wells shall be submitted to the RWQCB for approval by the RWQCB Executive Officer prior to the installation. In addition, a mean sea level (MSL) reference elevation shall be established for each well in order to determine water elevations. The RWQCB Executive Officer, after reviewing the information submitted, may waive this requirement if it is determined that the benefit of such monitoring is not commensurate to the level of protection.

Results shall be submitted to the RWQCB 30 days prior to any biosolids application at each site and annually thereafter. Samples shall be collected from each of the monitoring wells annually and shall be analyzed for the following parameters:

Parameter	Units
Static Water Level	feet (MSL)
Total Dissolved Solids	mg/L
Sodium	mg/L
Chloride	mg/L
Nitrate	mg/L as N
Total Nitrogen	mg/L as N
pH	pH units

Initial testing shall also include the following parameters:

Arsenic	mg/L
Cadmium	mg/L
Copper	mg/L
Lead	mg/L
Mercury	mg/L
Molybdenum	mg/L
Nickel	mg/L
Selenium	mg/L
Zinc	mg/L

6. Biosolids Storage Plan (as required by Storage and Transportation Spec. No. 8)

A biosolids storage plan must be attached (even if no *on-site* biosolids storage will be provided). The biosolids storage plan should include at a minimum:

If on-site storage will be provided:

a. Size of biosolids storage area
b. How frequently it will be used (emergency basis only or routine use)
c. Leachate controls
d. Erosion controls
e. Run-on/runoff controls

If no on-site storage will be provided:

a. Location of off-site storage facilities
b. Emergency storage plans

7. Erosion Control Plan (as required by Discharge Specification No. 8)

Biosolids applied to ground surfaces having a 10 percent or greater slope requires an Erosion Control Plan. The Plan should outline conditions that justify application of biosolids to the 10 percent or greater slopes and specify the application and management practices to be used to assure containment of the biosolids on the application site.

8. Spill Response and Traffic Plan (as required by Biosolids Storage and Transportation Specification No. 14)

a. The Spill Response Plan should include at a minimum:

(1) Emergency contacts and notification procedures.
(2) Personal protective equipment requirements.
(3) Response instructions for spill during biosolids transport.
(4) Response instructions for storage facility failure.
(5) Response instructions if hazardous or other unauthorized material is found.

b. The Traffic Plan should include at a minimum:

(1) The proposed route for all vehicles handling biosolids.
(2) The anticipated maximum vehicle weight.

9. Adverse Weather and Alternative Plan

Submit an Adverse Weather and Alternative Plan that details procedures to address times when biosolids cannot be applied to the site(s) due to adverse weather or other conditions (wind, precipitation, field preparation delays, access road limitations, etc.).

10. Land Productivity

A. Changes in Soil Fertility and Salinity and Resulting Effects on Productivity

"Attach a report from a certified soil scientist or a certified agronomist which evaluates the potential effects including potential nutrient imbalances, metals phytotoxicity, and excessive salinity on land productivity. The soil scientist and/or agronomist shall make recommendations, as deemed necessary, after considering the nature of the application site soils and biosolids characterization data and the need to preserve short term and long term land productivity. Those recommendations shall be reflected in the Pre-Application report regarding the proper rate of biosolids applications, any soil management

(such as supplemental fertilizers and pH adjustment), appropriate crop, and grazing practice recommendations."

B. Erosion Hazard Rating

The discharger shall submit an erosion hazard report (derived from USDA soil survey reports[13]) which assesses the proposed application site. The assessment will use the table below to determine whether soils could be degraded or land productivity reduced.

[13] Where a soils survey report is not available for a proposed application site, the applicant shall have a qualified soil scientist determine the erosion hazard (using NRCS guidelines), unless the slope of the site is 3% or less. Sites with slopes of 3% or less will be considered to have a slight erosion hazard.

Limitations to Land Application			
Parameter	**Slight**	**Moderate**	**Severe**
Cation exchange capacity[a] (average milliequivalents per 100 g, 0-20 inches depth)	**>15**	**10-15**	**<10**
pH[b] (average 0-20 inches depth)	**>6.5**	**5.0 to 6.5**	**<5.0**
Erosion hazard rating[c]	**None to slight**	**Moderate**	**High to severe**

[a] Cation exchange capacity limits based on professional judgment.
[b] pH limits based on U.S. Department of Agriculture (1993).
[c] Erosion hazard limits based on professional judgment.

Provided that the applicant, a soil scientist, or agronomist has provided written confirmation to the RWQCB that soils will not be degraded and/or land productivity will not be reduced as a result of nutrient imbalances, metals-related phytotoxicity, or adverse salinity effects, biosolids may be applied on any site having a "slight" limitation as defined in the table. At sites having a "moderate" limitation, biosolids may be applied only where the crop is not known to be particularly sensitive to metals and nutrient imbalances or is not known to be bioaccumulative of heavy metals. Sites having a "severe" limitation are excluded from eligibility under the GO. Sites with a slope of greater than 20% shall not accept biosolids unless those sites will be immediately covered by sod or a sufficient mulch cover to control erosion.

11. A biological site assessment is required in areas where natural terrestrial habitat (previously undisturbed lands) and fallow lands (as defined in Findings No. 3m in the General Order) exist and are planned for biosolids applications. The assessment shall be conducted to identify any special-status plant and wildlife species onsite, submitted as part of the Pre-Application Report, and shall be conducted by a qualified biologist. This report must be forwarded to the appropriate regional office of the DFG and the Endangered Species Unit of the USFWS in Sacramento for review and approval of the mitigation strategy, as appropriate. If there are no special-status species present, RWQCB may continue with the project evaluation. If special-status species could be affected, the project will not be authorized under the GO unless the applicant submits a plan to mitigate for any significant impacts on special-status species, obtains the appropriate permits, and agrees to implement the mitigation.

ANNUAL REPORTING

1. **Ground Water Monitoring** (if required in the Pre-Application Report)

   Samples shall be collected from each of the monitoring wells annually and shall be analyzed for the following parameters:

Parameter	Units
Static Water Level	feet (MSL)
Total Dissolved Solids	mg/1
Sodium	mg/1
Chloride	mg/1
Nitrate	mg/1 as N
Total Nitrogen	mg/1 as N
pH	pH units
Arsenic (As)	mg/l
Selenium (Se)	mg/l
Molybdenum (Cu)	mg/l

2. **Application Information**

Quantity of Biosolids Applied		Dry tons
Application Area Size		Acres
Total Nitrogen Concentration in Biosolids		mg/kg
Nitrogen Loading		Lb. plant avail. Nitrogen per acre
Residual Nitrogen[14]		Lbs. per acre
Crop		
Amount of Crop Produced		Specify units
Plant tissue testing for Molybdenum (mo)[6]		
Plant tissue testing for Copper (cu),[6]		
Plant tissue testing for Selenium (Se)[15]		

[14] As determined by field soil nitrogen testing in an 18 inch depth.

[15] Crop composite and only required where crops are used as animal feeds.

3. **Pollutant Loadings for Each Application Site**

Pollutant	Total Loadings from Previous Years (kg/ha)	Loading This Year (kg/ha)	Background Soils Conc. (kg/ha) (6" depth)	Cumulative Metal Load to Date (kg/ha)	Percent Cumulative Limit to Date
Arsenic					
Cadmium					
Copper					
Lead					
Mercury					
Molybdenum					
Nickel					
Selenium					
Zinc					

4. **Constituent Concentrations (Each Source)**

Constituent	Concentration in Biosolids, (mg/kg, dry weight)
Arsenic	
Cadmium	
Copper	
Lead	
Mercury	
Molybdenum	
Nickel	
Selenium	
Zinc	
Total Solids Content	%
Total Nitrogen	
Fecal Coliform	MPN/gram
Ammonia Nitrogen, as N	
Total Phosphorus, as P	
Total Potassium	
SW 846[16] Method 8080 for PCB Aroclors, Aldrin/Dieldrin	
EPA Method 8270 Semi-Volatile Organics	

5. **Site Map**

Provide a site map identifying the area(s) of application clearly showing each field to which biosolids have been applied and crop planted.

[16] The discharger shall use the most recent version of SW 486 methods for detecting PCB constituents and list all Aroclor concentrations with the summation of total PCBs.

6. **40 CFR Part 503**

Attach a copy of the generator's monitoring report for compliance with the 40 CFR Part 503.

GENERAL REPORTING

1. Pre-Application Reports shall be submitted for RWQCB staff review and approval at least 30 days prior to application of biosolids. Annual Reports covering the period between January 1 to December 31 shall be submitted by February 15 of the following year. If no applications occurred during the year, the discharger shall submit a report indicating that no discharge occurred during the year.

2. The collection, preservation and holding times of all samples shall be in accordance with U.S. Environmental Protection Agency approved procedures. A laboratory certified by the California Department of Health Services to perform the required analyses shall conduct all analyses, except soil nitrogen and plant tissue samples for selenium, copper and molybdenum. Analysis for soil nitrogen and plant tissue concentrations of selenium and molybdenum shall participate in a program similar to the North American Proficiency Testing Program (NAPT) operated by the Soil Science of America. The RWQCB Executive Officer may allow use of an uncertified laboratory in accordance with Provision 18.

3. If there is no discharge during a required reporting period, the discharger shall submit a letter report to the RWQCB indicating that there has been no activity during the required reporting period.

4. Each report shall be signed and contain the following certification:

   "I certify under penalty of law that I have personally examined and am familiar with the information submitted in this document and all attachments and that, based on my inquiry of those individuals immediately responsible for obtaining the information, I believe that the information is true, accurate, and complete. I am aware that there are significant penalties for submitting false information, including the possibility of fine and imprisonment"

5. A duly authorized representative of the discharger may sign the documents if:

   a. The authorization is made in writing by the person described above;

   b. The authorization specified an individual or person having responsibility for the overall operation of the regulated disposal system; and

   c. The written authorization is submitted to the RWQCB Executive Officer.

6. The discharger shall arrange the data in tabular form so that the specified information is readily discernible. The data shall be summarized in such a manner as to clearly illustrate whether the facility is operating in compliance with waste discharge requirements.

7. Report immediately (within 24 hours) to the RWQCB Executive Officer and Director of County Environmental Health by telephone with a follow-up letter any discharge which threatens the environment or human health. During non-business hours, report to the Office of Emergency Services by telephone at 1-800-852-7550.

8. The results of any monitoring done more frequently than required at the locations specified in the Monitoring and Reporting Program shall be reported to the RWQCB.

State of California

State Water Resources Control Board

NOTICE OF INTENT

TO COMPLY WITH THE TERMS OF GENERAL PERMIT ORDER NO . 2000-___-DWQ
FOR THE DISCHARGE OF BIOSOLIDS TO LAND
FOR USE IN AGRICULTURAL, SILVICULTURAL, HORTICULTURAL AND LAND RECLAMATION ACTIVITIES

ATTACHMENT A

Mark Only One Item	1. ☐ New Discharge Under MODEL Permit 2. ☐ Change of Information-WDID # _____

I. Property Owner (Required)

Name				
Mailing Address				
City	County	State	Zip	Phone
Contact Person		(check one) Owner _____ Operator _____ Owner/operator _____		

II. Generator (Required . If more than one generator, attach the information and ensure that the signature block is copied, signed and attached.)

Name				
Mailing Address				
City	County	State	Zip	Phone
Contact Person				

III. Site Operator/Property Manager (if any)

Name				
Mailing Address				
City	County	State	Zip	Phone
Contact Person				

IV. Billing Address

Name				
Mailing Address				
City	County	State	Zip	Phone
Contact Person				

STATE USE ONLY

WDID: ☐☐☐☐☐☐☐☐☐☐☐	Regional Board Office: ☐☐	Date NOI Received: _____	Date NOI Processed: _____
	Fee Amount Received: $ _____	Check #: _____	

V. Site Operator

Name				
Mailing Address				
City	County	State	Zip	Phone
Contact Person				

VI. Hauler Information

Name				
Mailing Address				
City	County	State	Zip	Phone
Contact Person				
Type of Transportation				

VII. Site Location

Street (including address, if any)	
Nearest Cross Street(s)	
County:	Total Size of Site (acres):

Township/Range/Section T _____, R _____, Section _____, ____ ___B&M

Latitude/Longitude (From Center): _____ Deg. _____ Min. _____ Sec N. _____ Deg. _____ Min. _____ Sec. W

Attach a map of at least 1:24000 (1" = 2000") showing the proposed application site (e.g., USGS 7.5" topographic map). The map should also show run-on/runoff controls, storage areas, nearby surface waters, wells and residences, the application areas including setback and buffer zones .

VIII. Application Area Information

Subject	Value	Applicable Unit/ Type of Measure
Quantity of Biosolids to be Applied		dry tons per year
Total Biosolids Application Proposed		dry tons
Land Use Zone		
Adjacent Land Use Zones		
Application Area Size		acres
Proposed Nitrogen Loading		lb. Plant Available Nitrogen/acre
Proposed Crop, Use		crop type, human/animal/neither
Crop Nitrogen Usage		1b. Nitrogen/year
Nitrogen Usage Reference		
Depth of Root Zone for Crop Being Planted		inches
Will Setback Limits Be Met?		Yes or No
Distance to Nearest Inhabited Dwelling		feet/miles
Public Access Controls		Specify Type
Runoff Controls		Attach plans
Prevailing Wind Direction		
Minimum Depth to Ground Water		feet
How Minimum Depth to Ground Water is Determined		

Anticipated Average Daily Application Rate		dry tons/day
Source of Water for Crop		
Average Annual Precipitation		inches/year

Attach an anticipated annual time schedule for the field operations including anticipated biosolids applications windows, seeding operations, supplemental fertilization, and cultivation/harvest.

IX. Soil Constituent Concentrations (Each Source)

Constituent	Concentration in Soil, mg/kg, dry weight
Arsenic	
Cadmium	
Copper	
Lead	
Mercury	
Molybdenum	
Nickel	
Selenium	
Zinc	
pH	
Estimated Permeability	cm/sec
Cation Exchange Capacity	meq/100g
Total Nitrogen	
Ammonia Nitrogen, as N	
Total Phosphorus, as P	
Total Potassium	

X Have any proposed biosolids application sites been fallow for more than one year? YES NO

XI Are there existing agricultural, silvicultural, or horticultural operations at all the proposed application sites? YES NO

XII Is it known whether any locations within the proposed land application site contain biologically unique or sensitive natural communities? YES NO

If natural terrestrial habitats are present on the project site, a biological site assessment must be conducted to determine whether biologically unique or sensitive natural communities occur and whether they could be disturbed by the application of biosolids; this report must be forwarded to the appropriate regional office of DFG and the Endangered Species Unit of the USFWS in Sacramento for review and approval of the mitigation strategy, as necessary. If biologically unique or sensitive natural communities are present and more than 10% or 10 acres will be disturbed, whichever is less, the project will not be authorized under the GO unless the applicant submits a plan to mitigate for any significant impacts on biologically unique or sensitive natural communities and agrees to implement the mitigation.

XIII Biosolids Storage Plan (as required by Biosolids Storage and Transportations Spec. No, 8)

A biosolids storage plan must be attached (if no ***on-site*** biosolids storage will be provided, a contingency plan for inclement weather operation must be provided). The biosolids' storage plan should include at a minimum:

If on-site storage will be provided:

a. Size of biosolids storage area
b. How frequently it will be used (emergency basis only or routine use)
c. Leachate controls
d. Erosion controls
e. Run-on/runoff controls

If no on-site storage will be provided:

a. Location of off-site storage facilities

b. Emergency storage plans

XIV Erosion Control Plan (if applicable) (as required by Discharge Specification No, 8)

Biosolids applied to ground surfaces having a 10 percent or greater slope requires an Erosion Control Plan. The Plan should outline conditions that justify application of biosolids to the 10 percent or greater slopes and specify the application and management practices to be used to assure containment of the biosolids on the application site.

XV. Spill Response and Traffic Plan (as required byBiosolids Storage and Transportation Spec. No. 14)

a. The Spill Response Plan should include at a minimum:

1 Emergency contacts and notification procedures
2. Require personal protective equipment requirement
3. Response instructions for spill during biosolids transport
4. Response instructions for storage facility failure
5. Response instructions if hazardous or other unauthorized material is found

b. The Traffic Plan should include at a minimum:

1. The proposed route for all vehicles handling biosolids
2. Describe the anticipated maximum vehicle weight

XVI. Adverse Weather and Alternative Plan: (as required by Biosolids Storage and Transportation Spec. No. 8)

Submit an Adverse Weather and Alternative Plan that details procedures to address times when biosolids cannot be applied to the site(s) due to adverse weather or other conditions (wind, precipitation, field preparation delays, access road limitations, etc.).

XVII. CERTIFICATION

"I certify under penalty of law that this document and all attachments were prepared under my direction and supervision in accordance with a system designed to assure that qualified personnel properly gather and evaluate the information submitted. Based on my inquiry of the person or persons who manage the system, or those persons directly responsible for gathering the information, the information submitted is, to the best of my knowledge and belief, true, accurate, and complete. I am aware that there are significant penalties for submitting false information, including the possibility of fine and imprisonment." In addition, I certify that the provisions of the permit, including the criteria for eligibility, will be complied with.	
Signature of Owner/Operator of Spreading Operations	Title
Printed or Typed Name	Date
Signature of Property Owner	Title
Printed or Typed Name	Date
Signature of Site Operator/Manager (if any)	Title
Printed or Typed Name	Date

State of California
State Water Resources Control Board

NOTICE OF TERMINATION

TO COMPLY WITH THE TERMS OF GENERAL PERMIT ORDER NO . 2000-___-DWQ
FOR THE DISCHARGE OF BIOSOLIDS TO LAND
FOR USE IN AGRICULTURAL, SILVICULTURAL, HORTICULTURAL AND LAND RECLAMATION ACTIVITIES

ATTACHMENT B

WDID # _____

I. Property Owner

Name				
Mailing Address				
City	County	State	Zip	Phone
Contact Person				

II. Generator

Name				
Mailing Address				
City	County	State	Zip	Phone
Contact Person				

III. Owner/Operator of spreading operations

Name				
Mailing Address				
City	County	State	Zip	Phone
Contact Person		(check one) Owner _____ Operator _____ Owner/operator _____		

IV. Site Operator/Property Manager (if any)

Name				
Mailing Address		Contact Person		
City	County	State	Zip	Phone

V. Billing Address

Name				
Mailing Address		Contact Person		
City	County	State	Zip	Phone

VI. Hauler Information

Name	
Mailing Address	

City	County	State	Zip	Phone

VII. Site Location

Street (including address, if any)	
Nearest Cross Street(s)	
County:	Total Size of Site (acres):

Township/Range/Section T _____, R _____, Section _____, ____ ____B&M

Latitude/Longitude (From Center): _____ Deg. _____ Min. _____ Sec N. _____ Deg. _____ Min. _____ Sec. W

Attach a map of at least 1:24000 (1" = 2000") showing the proposed application site (e.g., USGS 7.5" topographic map). The map should also show run-on/runoff controls, storage areas, nearby surface waters, wells and residences, the application areas including setback and buffer zones .

VIII. Application Area Information

Subject	Value	Applicable Unit/ Type of Measure
Quantity of Biosolids Applied		dry tons per year
Application Area Size		acres
Nitrogen Loading		lb. Plant Available Nitrogen/acre
Crop, Use		crop type, human/animal/neither
Crop Nitrogen Usage		1b. Nitrogen/year
Nitrogen Usage Reference		
Last Date of Class B Biosolids Application		Date
Public Access Controls		Specify Type

IX. Attached is the Annual Monitoring and Reporting Report for the current year. Yes No

X. CERTIFICATION

"I certify under penalty of law that this document and all attachments were prepared under my direction and supervision in accordance with a system designed to assure that qualified personnel properly gather and evaluate the information submitted. Based on my inquiry of the person or persons who manage the system, or those persons directly responsible for gathering the information, the information submitted is, to the best of my knowledge and belief, true, accurate, and complete. I am aware that there are significant penalties for submitting false information, including the possibility of fine and imprisonment." In addition, I certify that the provisions of the permit, including the criteria for eligibility, will be complied with.

Signature of Generator	Title
Printed or Typed Name	Date
Signature of Property Owner	Title
Printed or Typed Name	Date
Signature of Site Operator/Manager (if any)	Title
Printed or Typed Name	Date

STATE USE ONLY

WDID:	Regional Board Office:	Date NOI Received:	Date NOI Processed:
		_____	_____
	Fee Amount Received: $ _____	Check #: _____	

ATTACHMENT 3: Project Location and Biosolids Application Area Maps

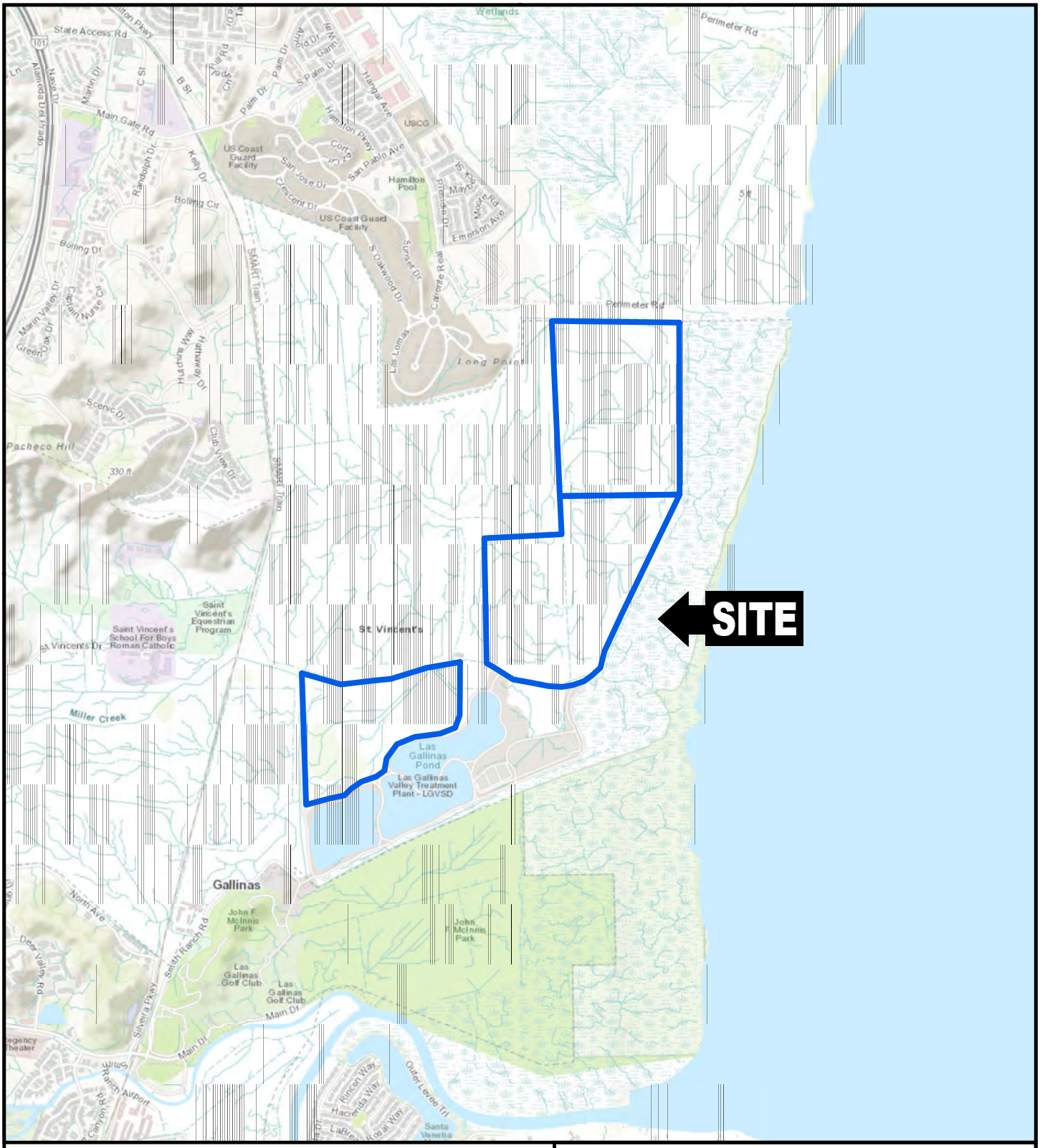

QUADRANGLE LOCATION

N

1,000 0 1,000'

Title:

SITE LOCATION MAP

SAN RAFAEL, CA

Prepared for: LAS GALLINAS VALLEY SANITARY DISTRICT

ROUX

Compiled by: S.A.	Date: 06/23/21	FIGURE
Prepared by: L.M.	Scale: AS SHOWN	
Project Mgr: M.F.	Project: LGVSD	1
File: LGVSD.100.01_mf.mxd		

S:\CLIENTS\LGVSD\06-GIS\LGVSD.100.01_MF.MXD

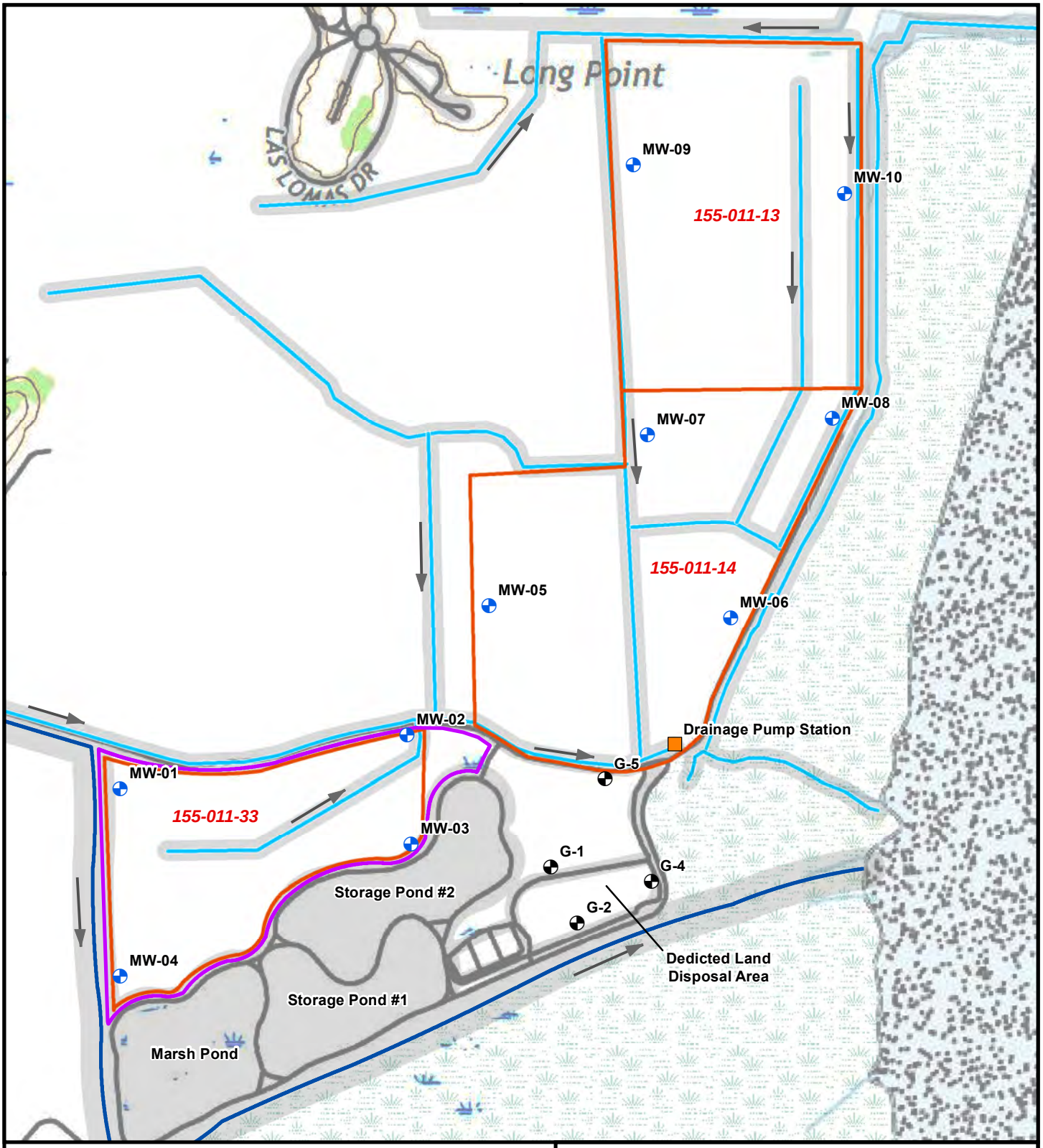

LEGEND

- PROPOSED GROUNDWATER MONITORING WELL
- EXISTING MONITORING WELLS
- DRAINAGE PUMP STATION
- MILLER CREEK
- WATER FEATURE
- ELEVATED ROADWAY/ TRAIL
- DRAINAGE FLOW DIRECTION
- SITE BOUNDARY
- BUFFER ZONE

N

500 0 500'

Title:

SITE PLAN

SAN RAFAEL, CA

Prepared for: LAS GALLINAS VALLEY SANITARY DISTRICT

ROUX

Compiled by: S.A.	Date: 07/27/21	FIGURE
Prepared by: L.M.	Scale: AS SHOWN	2
Project Mgr: M.F.	Project: LGVSD	
File: LGVSD.100.02.mxd		

S:\GIS\PROJECTS\PROPOSALS\LGDSV\100\LGVSD.100.02.MXD

Appendix G
As-Built Drawings for Sludge Storage Lagoons

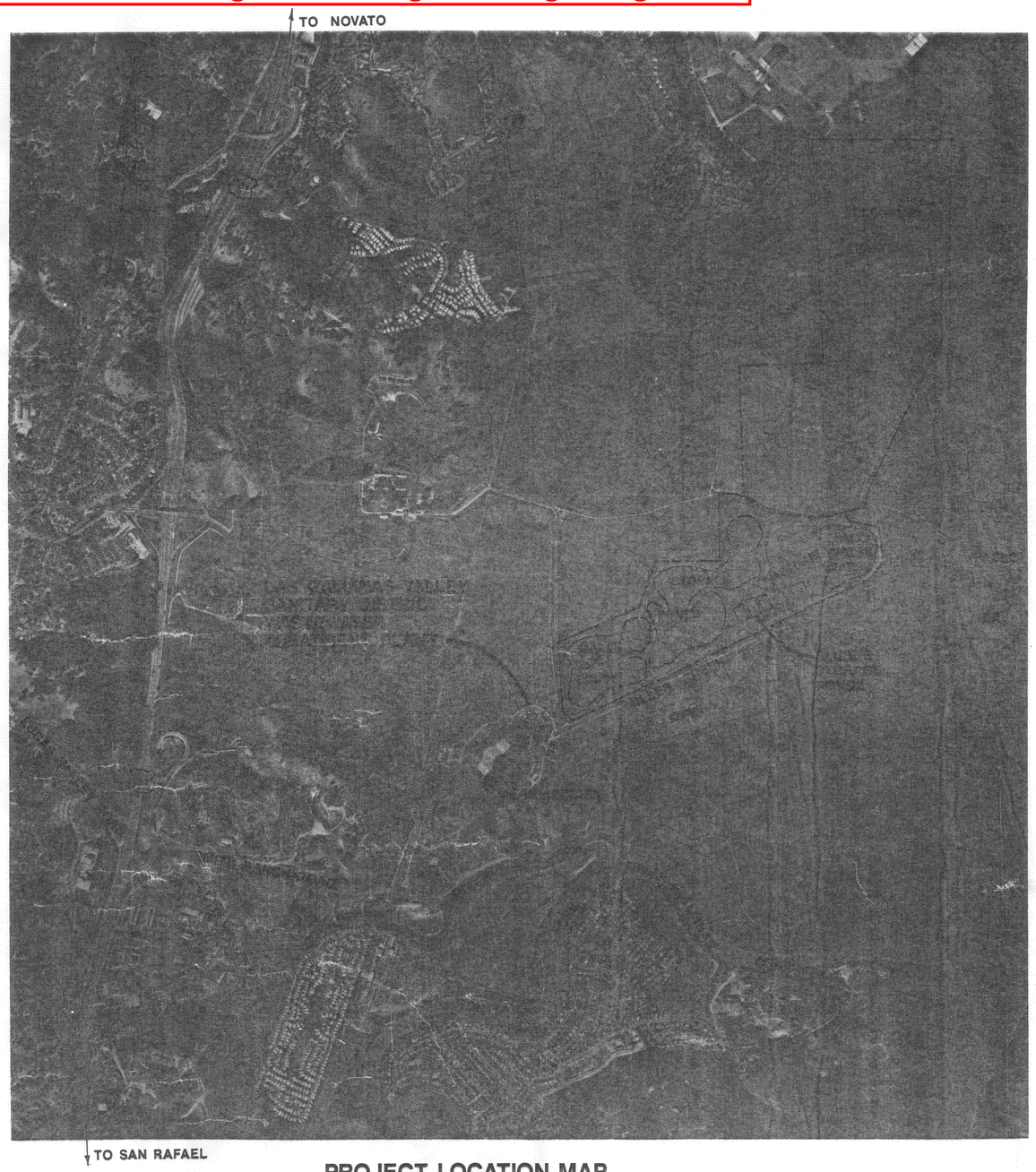

PROJECT LOCATION MAP

0 1000 2000 3000

SCALE IN FEET

NOTE
ALL ELEVATIONS ON THESE PLANS REFER TO USC & GS MEAN SEA LEVEL DATUM.

Construction contractor agrees that in accordance with generally accepted construction practices, construction contractor will be required to assume sole and complete responsibility for job site conditions during the course of construction of the project, including safety of all persons and property; that this requirement shall be made to apply continuously and not be limited to normal working hours, and construction contractor further agrees to defend, indemnify and hold design professional harmless from any and all liability, real or alleged, in connection with the performance of work on this project, excepting liability arising from the sole negligence of design professional.

California Council of Civil Engineers & Land Surveyors

LAS GALLINAS VALLEY SANITARY DISTRICT

MARIN COUNTY, CALIFORNIA

PLANS

FOR THE CONSTRUCTION OF

SLUDGE STORAGE POND IMPROVEMENTS

DISTRICT BOARD

FRANK SOLOMON, JR. - PRESIDENT
DOUGLAS A. COLBERT - VICE PRESIDENT
LEON EDDINGS
BERNIE B. HEARE
SESTO F. LUCCHI

BARBARA J. REETZ - SECRETARY
PETER R. VINE - ENGINEER MANAGER

NUTE ENGINEERING
CIVIL AND SANITARY CONSULTANTS
SAN RAFAEL, CALIFORNIA

SUBMITTED BY W. Edward Nute

REGISTERED PROFESSIONAL ENGINEER W. Edward Nute No. 15945 Exp. 6/30/93 CIVIL STATE OF CALIFORNIA

APPROVED BY

ADOPTED BY DISTRICT BOARD JUNE 12, 1991

Barbara J. Reetz
SECRETARY

These as-built or record drawings (or corrected specifications) have been prepared, in part, on the basis of information compiled and furnished by others. The Engineer will not be responsible for any errors or omissions which have been incorporated into this document as a result.

1 OF 29

1	AS BUILT	SEPT 1993

LAS GALLINAS VALLEY SANITARY DISTRICT
Marin County, California

SLUDGE STORAGE POND IMPROVEMENTS

PROJECT LOCATION MAP

NUTE ENGINEERING
SAN RAFAEL, CALIFORNIA

Drawn by	Scale AS SHOWN
Des./Chkd by	Date JUNE 1991

ABBREVIATIONS

A.C.	ASPHALTIC CONCRETE
AGG.	AGGREGATE
ALUM.	ALUMINUM
C	CONDUIT
℄	CENTERLINE
C.B.	CATCH BASIN
C.C.	CENTER TO CENTER
CLR.	CLEAR OR CLEARANCE
C.O.	CLEANOUT
CONC.	CONCRETE
CONN.	CONNECTION
CONST.	CONSTRUCTION
DBL.	DOUBLE
D.I.	DUCTILE IRON
DIA.	DIAMETER
DISCH.	DISCHARGE
DWG.	DRAWING
EA.	EACH
E.F.	EACH FACE
EL.	ELEVATION
EQ.	EQUAL
E.W.	EACH WAY
EXIST., E., (E)	EXISTING
FAB.	FABRICATED
F.C.A.	FLEXIBLE COUPLING ADAPTER
F.F.	FINISH FLOOR
FLEX. FLG. CPLG.	FLEXIBLE FLANGED COUPLING
FT.	FEET
G	GAS
GA.	GAUGE (GAGE)
GALV.	GALVANIZED
G.I.	GALVANIZED IRON
GND.	GROUND
GRTG.	GRATING
HDPE	HIGH DENSITY POLYETHYLENE
HORIZ.	HORIZONTAL
HVY.	HEAVY
I.D.	INSIDE DIAMETER
INV.	INVERT
L.G.V.S.D.	LAS GALLINAS VALLEY SANITARY DISTRICT
L.R.	LONG RADIUS
MAX.	MAXIMUM
MH	MANHOLE
MIN.	MINIMUM
M.J.	MECHANICAL JOINT
M.M.W.D.	MARIN MUNICIPAL WATER DSITRICT
N	NORTH
(N)	NEW ITEM AS INDICATED
NO.	NUMBER
N.T.S.	NOT TO SCALE
ϕ	DIAMETER
O.C.	ON CENTER
O.D.	OUTSIDE DIAMETER
OPNG.	OPENING
PE	POLYETHYLENE
P.G.& E.	PACIFIC GAS & ELECTRIC
PRESS.	PRESSURE
PT.	POINT
PVC	POLYVINYL CHLORIDE
R.	RADIUS
R.C.P.	REINFORCED CONCRETE PIPE
REQ'D	REQUIRED
RWD.	REDWOOD
SCH.	SCHEDULE
SDR	STANDARD DIMENSION RATIO
S.D.	STORM DRAIN
S.S.	STAINLESS STEEL
STL.	STEEL
TEMP.	TEMPORARY
TY.	TYPE
TYP.	TYPICAL
VERT.	VERTICAL
W.	WATER
W/	WITH
W.S.	WATER SURFACE

PIPING SCHEDULE

LINE NO.	DIAMETER(1)	MATERIAL	DESCRIPTION	PIPING NOTES
10b	24"	POLYETHYLENE (SDR = 21)	PLANT EFFLUENT	
10c	24"	WELDED STEEL CEMENT L/C		
11d	6"-12"	PVC C-900 (DR=25)	SEWERS AND DRAINS	
11e	24"-60"	ASP BONDED CORRUGATED		
29a	10"	VCP	DIGESTER SUPERNATANT	
29b	10"	CAST IRON CEMENT LINED		
29c	10"	PVC C-900 (DR=25)		
38	1"-2"	PVC SCH 40	DOMESTIC WATER	(2)
39	1"-4"	PVC SCH 40	RECLAIMED WATER	
66a	12"	CAST IRON CEMENT LINED	POND TRANSFER	
66b	12"-24"	WELDED STEEL CEMENT L/C		
66c	18"-24"	POLYETHLYENE (SDR = 21)		
67a	18"	WELDED STEEL CEMENT L/C	POND EFFLUENT	
67b	18"	POLYETHYLENE (SDR = 21)		
68a	12"	CAST IRON CEMENT LINED	POND RETURN	
68b	12"	WELDED STEEL CEMENT L/C		
69	24"	POLYETHYLENE (SDR = 21)	POND OVERFLOW	
70a	6"-12"	WELDED STEEL CEMENT L/C	IRRIGATION LINES	
70b	4"-12"	PVC B & S CLASS 200		(3)
70c	1/2"-8"	PVC SCH 80 SOLVENT WELD		
70d	4"-6"	CAST IRON CEMENT LINED		
70e	3"	ALUMINUM CLASS 150		
71	24"	WELDED STEEL CEMENT L/C	SCREEN INTAKE	
72	8"	CAST IRON CEMENT LINED	SCREEN BACKWASH	
73a	4"-8"	DUCTILE IRON CEMENT LINED	SUMP PUMP RETURN	
73b	8"-10"	POLYETHYLENE (SDR = 21)		
73c	8"	WELDED STEEL CEMENT L/C		
73d	2"	PVC SCH 40		
74a	6"-8"	POLYETHYLENE (SDR = 17)	SLUDGE POND FILL	
74b	8"	WELDED STEEL		
74c	6"-8"	DUCTILE IRON CEMENT LINED		
75	6"-8"	POLYETHYLENE (SDR = 21)	SLUDGE POND OVERFLOW	
76	8"	POLYETHYLENE (SDR = 17)	SLUDGE POND RETURN	
77	6"	DUCTILE IRON CEMENT L/C	SLUDGE POND DRAW OFF	
78	6"	POLYETHYLENE (SDR = 21)	LEACHATE DRAIN	
79	6"	POLYETHYLENE (SDR = 21)	POND UNDERDRAIN	
80	3"-4"	PVC SCH 80 SOLVENT WELD	MMWD SLUDGE BLOWDOWN	

PIPING NOTES:

1. ALL PIPE DIAMETERS ARE INSIDE DIAMETERS, EXCEPT FOR POLYETHYLENE PIPES, DIAMETER IS OUTSIDE DIAMETER.
2. EXPOSED PIPES SHALL BE SCHEDULE 40 GALVANIZED IRON.
3. ALL FITTINGS SHALL BE CAST IRON WITH HARNESS RESTRAINT.
4. ALL DUCTILE IRON PIPE SHALL HAVE POLYETHYLENE WRAPPING.

LEGEND

- A / 12 — SECTION NO. SECTION DESIGNATION SHEET NO.
- 2 / 18 — DETAIL NO. DETAIL DESIGNATION SHEET NO.
- 8" 74 b — PIPELINE SIZE AND DESIGNATION (REFER TO PIPING SCHEDULE, THIS SHEET)
- EXISTING PIPELINE
- 12" P-2a — VALVE SIZE AND DESIGNATION (REFER TO VALVE SCHEDULE, SPEC'S SECTION 15050
- PROPERTY LINE
- FENCE
- MANHOLE
- VALVE
- EB-9 — SOILS BORING NO. EB 9

INDEX TO PLANS

SHEET NO.	TITLE
1.	PROJECT LOCATION MAP
2.	INDEX TO PLANS, PIPING SCHEDULE & ABBREVIATIONS
3.	SITE PLAN
4.	SLUDGE STORAGE PONDS EXISTING TOPOGRAPHY
5.	SLUDGE STORAGE PONDS GRADING LAYOUT
6.	SLUDGE STORAGE PONDS PIPING LAYOUT
7.	SLUDGE STORAGE PONDS CROSS SECTIONS
8.	SLUDGE STORAGE PONDS POND LINER DETAILS
9.	SLUDGE STORAGE PONDS POND OUTLET BOX DETAILS
10.	POND SUPERNATANT PUMP STATION SITE PLAN & DETAILS
11.	POND SUPERNATANT PUMP STATION MECHANICAL PLANS & DETAILS
12.	POND SUPERNATANT PUMP STATION STRUCTURAL PLANS, SECTIONS & DETAILS
13.	DIGESTER SUPERNATANT PUMP STATION AND DIGESTED SLUDGE PUMP SITE PLAN AND PIPING LAYOUT
14.	DIGESTER SUPERNATANT PUMP STATION SITE PLAN
15.	DIGESTER SUPERNATANT PUMP STATION MECHANICAL PLANS, SECTIONS & DETAILS
16.	DIGESTER SUPERNATANT PUMP STATION STRUCTURAL PLANS, SECTIONS & DETAILS
17.	DIGESTED SLUDGE PUMP PLAN & SECTIONS
18.	PUMP STATIONS MISCELLANEOUS DETAILS
19.	DIVERSION BOX PIPING CONNECTIONS & DETAILS
20.	BRIDGE PIPE CROSSING & DETAILS
21.	TRANSFER BOX GATE & DETAILS
22.	ELECTRICAL SITE PLAN
23.	ELECTRICAL TREATMENT PLANT YARD WIRING LAYOUT
24.	ELECTRICAL EFFLUENT PUMP STATION CONTROL PANEL MODIFICATIONS
25.	ELECTRICAL POND SUPERNATANT PUMP STATION DECK PLAN & DETAILS
26.	ELECTRICAL DIGESTER SUPERNATANT PUMP STATION DECK PLAN & DETAILS
27.	ELECTRICAL SUPERNATANT PUMP STATIONS WIRING DIAGRAMS & DETAILS
28.	ELECTRICAL DIGESTED SLUDGE PUMP SITE PLAN & WIRING DIAGRAMS
29.	ELECTRICAL TREATMENT PLANT GRAPHIC PANEL MODIFICATIONS

GENERAL NOTES

1. THE CONTRACTOR SHALL PHYSICALLY LOCATE AND UNCOVER (POTHOLE) ALL UTILITIES IN THE WORK AREA AHEAD OF THE TRENCHING OPERATION AS REQUIRED IN THE SPECIFICATIONS AND SHALL BE RESPONSIBLE FOR DAMAGE THERETO.
2. THESE DRAWINGS SHALL BE COORDINATED AND USED IN CONJUNCTION WITH FAVORABLY REVIEWED PIPE AND EQUIPMENT SHOP DRAWINGS.
3. SOILS BORINGS REFER TO SOILS INVESTIGATION REPORTS BY ASSOCIATED GEOTECHNICAL ENGINEERS AND HARDING LAWSON ASSOCIATES (SEE SPECS).
4. THE OVERHEAD ELECTRIC DISTRIBUTION SYSTEMS AND INDIVIDUAL SERVICE LINES ARE NOT SPECIFICALLY INDICATED ON THE DRAWINGS BUT DO EXIST IN THE AREA. THE CONTRACTOR SHALL EXERCISE CAUTION WHILE WORKING NEAR OR UNDER ALL ELECTRIC LINES.
5. THE CONTRACTOR SHALL INSTALL SAFETY GUARDS ON ALL MOVING OR ROTATING EQUIPMENT FURNISHED WHETHER SHOWN ON THE PLANS OR NOT. ALL SAFETY GUARDS SHALL CONFORM TO APPLICABLE FEDERAL, STATE AND LOCAL CODES AND REGULATIONS.
6. THE CONTRACTOR SHALL SECURE ALL NECESSARY PERMITS PRIOR TO COMMENCING WORK.
7. THE CONTRACTOR SHALL REPAIR OR REPLACE ALL IMPROVEMENTS WHICH ARE DAMAGED BY THE WORK.
8. THE CONTRACTOR SHALL COORDINATE HIS WORK WITH OTHERS.
9. ALL NUTS, BOLTS AND WASHERS SHALL BE STAINLESS STEEL.
10. ALL STAINLESS STEEL SHALL BE TYPE 316.
11. ALL UNDERGROUND METAL, INCLUDING STAINLESS STEEL, SHALL BE COATED AND WRAPPED (SEE SPECS).

These as-built or record drawings (or corrected specifications) have been prepared, in part, on the basis of information compiled and furnished by others. The Engineer will not be responsible for any errors or omissions which have been incorporated into this document as a result.

AS BUILT	SEPT 1993

LAS GALLINAS VALLEY SANITARY DISTRICT
Marin County, California

SLUDGE STORAGE POND IMPROVEMENTS

INDEX TO PLANS, PIPING SCHEDULE & ABBREVIATIONS

NUTE ENGINEERING
SAN RAFAEL, CALIFORNIA

Drawn by:		Job No.: 5498	Scale: NO SCALE
Checked by:	WEN	549BINDX	Date: JUNE, 1991

PASTURE

INSTALL 12" P-2a IN EXISTING 12" 70b W/ FCA & VALVE BOX (2/19)

DISPOSAL AREAS FOR EXCESS SUITABLE EXCAVATED MATERIAL. END DUMP FOR FUTURE USE BY DISTRICT. (BAY MUD IS NOT SUITABLE)

EXISTING EQUIPMENT STORAGE BLDG

EXIST DITCH

#1

#2

#3

EXIST ROAD

EXISTING DRAINAGE PUMP STATION

LANDS OF ST. VINCENTS SCHOOL FOR BOYS

(2/21) REMOVE EXISTING DIRT BARRIER. CONSTRUCT NEW COMPACTED EARTH DAM W/ DRAIN PIPE AND CHECK VALVE.

PASTURE 5

SAN PABLO BAY

N

EXISTING WINDMILL PUMP STATION

SALT WATER MARSH

EXISTING EFFLUENT PUMP STATION

EXIST. UTILITIES 2"38, 12"70b, & ELECTRIC CABLES

EXISTING DITCH

LANDS OF SILVEIRA

STORAGE POND NO. 2

T-7(E)

6"74a(E)

TRANSFER BOXES

T-6(E)

T-8(E)

T-5(E)

SLUDGE DISPOSAL PASTURE

SLUDGE STORAGE PONDS A B C

6"70c

(3/21) INSTALL GATES IN TRANSFER BOXES

T-1(E)

T-2(E)

MARSH POND

STORAGE POND NO. 1

EXISTING MMWD PUMP STATION

INSTALL NEW 8"74a & 8"76 AND CONDUITS

POND SUPERNATANT PUMP STATION

EXISTING MONITORING BLDG

EXISTING DIVERSION BOXES

T-3(E)

T-4(E)

MILLER CREEK

INSTALL DIGESTED SLUDGE PUMP

EXISTING UTILITIES 2"38, 24"66c, 10"73b, & ELECTRIC CABLES & CONDUITS FIELD LOCATE BEFORE TRENCHING

EXISTING PG&E TRANSMISSION LINES

INSTALL 8"74b ON BRIDGE SEE SHEET 20

8"74a

FOR PIPING CONNECTIONS DETAILS SEE SHEET 19.

CONNECT NEW 8"74a TO EXISTING 8"74a

CONNECT 8"76 TO EXIST 10"73b WITH VALVES

10"73b

EXISTING PIPELINES 24"10b, 2"38, 6"70b, 10"73b, 8"74a, 16" POLYETHYLENE, ELECTRIC CABLE & CONDUITS FIELD LOCATE BEFORE TRENCHING

McINNIS PARK
LANDS OF THE COUNTY OF MARIN

MMWD RECLAMATION PLANT

8"74a

CONNECT TO EXISTING 8"74a FIELD LOCATE

DIGESTER SUPERNATANT PUMP STATION

LAS GALLINAS VALLEY SANITARY DISTRICT WASTEWATER TREATMENT PLANT

LEGEND

LINE OF DITCH (E)

PROPERTY LINE

EXISTING PIPELINE

NEW PIPELINE

3 OF 29

NOTES:

1. SEE SHEET 21 FOR LEVEE ROAD REPAIR.

These as-built or record drawings (or corrected specifications) have been prepared, in part, on the basis of information compiled and furnished by others. The Engineer will not be responsible for any errors or omissions which have been incorporated into this document as a result.

⚠	AS BUILT	SEPT. 1993

LAS GALLINAS VALLEY SANITARY DISTRICT
Marin County, California

SLUDGE STORAGE POND IMPROVEMENTS

SITE PLAN

NUTE ENGINEERING
SAN RAFAEL, CALIFORNIA

Drawn by:	PAM, KR	Job No.:	5498	Scale:	1" = 200'
Checked by:	ELM/WEN		5498ELST\PLOT1	Date:	JUNE 1991

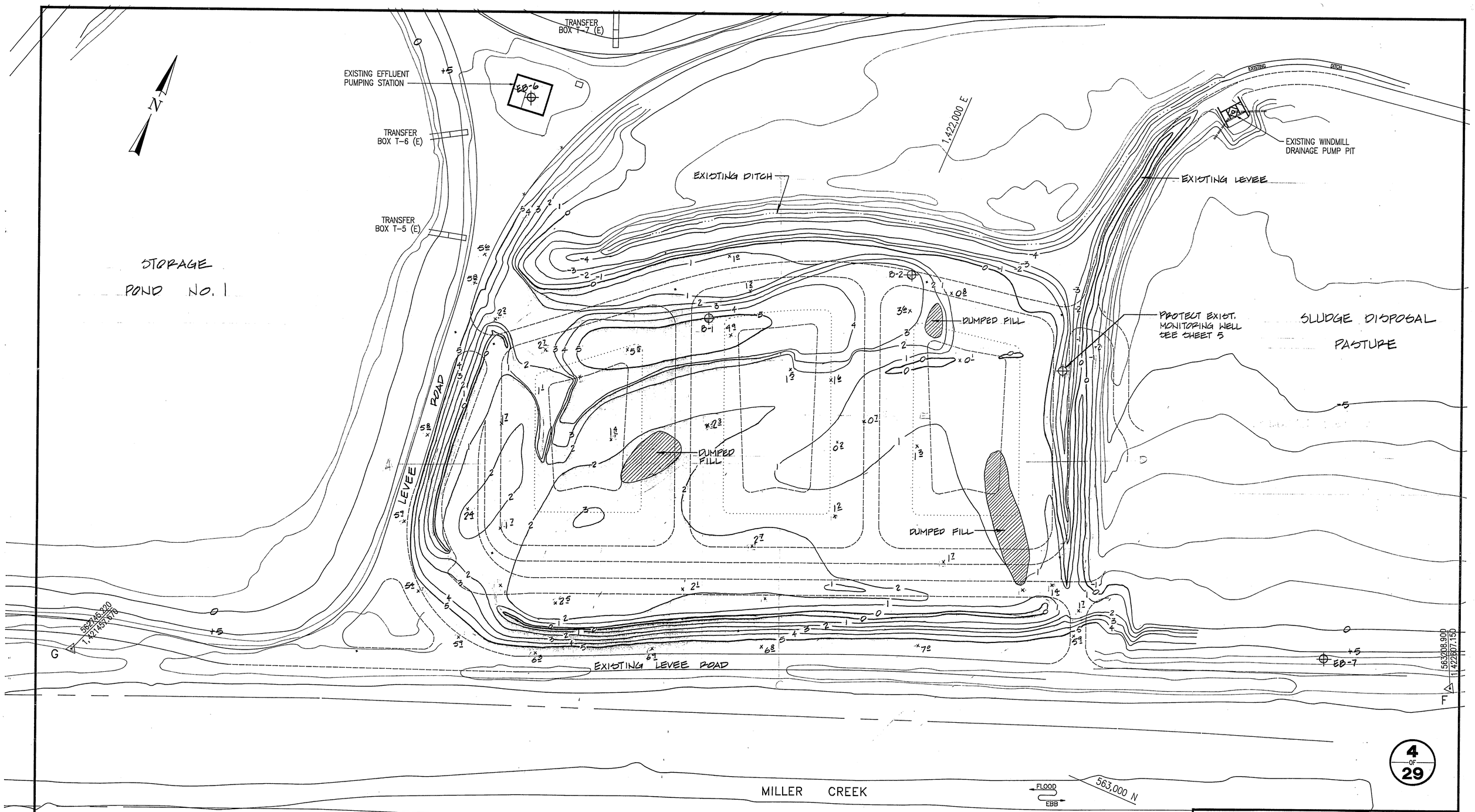

4 OF 29

NOTES:
1. SEE SPECS FOR SOIL BORING LOGS

These as-built or record drawings (or corrected specifications) have been prepared, in part, on the basis of information compiled and furnished by others. The Engineer will not be responsible for any errors or omissions which have been incorporated into this document as a result.

1	AS BUILT	SEPT 1993

LAS GALLINAS VALLEY SANITARY DISTRICT
Marin County, California

SLUDGE STORAGE POND IMPROVEMENTS

SLUDGE STORAGE PONDS EXISTING TOPOGRAPHY

NUTE ENGINEERING
SAN RAFAEL, CALIFORNIA

Drawn by:	PAM, KR	Job No.:	5498	Scale:	1" = 40'
Checked by:	WEN		5498POND\PLOT1	Date:	JUNE 1991

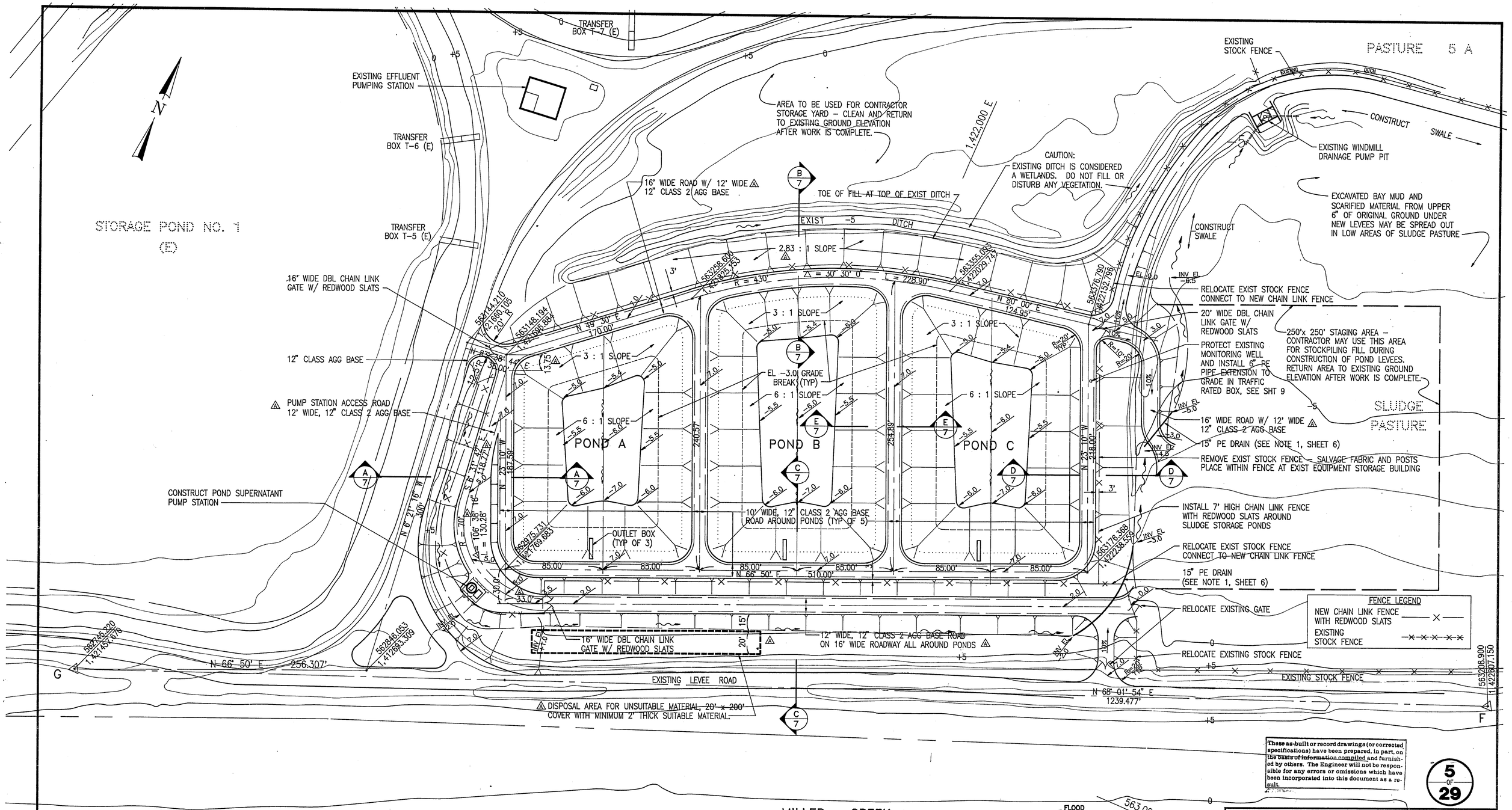

These as-built or record drawings (or corrected specifications) have been prepared, in part, on the basis of information compiled and furnished by others. The Engineer will not be responsible for any errors or omissions which have been incorporated into this document as a result.

5 OF 29

NOTES:

1. ALL SLOPES SHALL BE 3 : 1 UNLESS OTHERWISE SHOWN
2. UNSUITABLE MATERIAL, OTHER THAN ORGANIC MATERIAL FROM UPPER 6" OF ORIGINAL GROUND, MAY EITHER BE DISPOSED OF BY BURYING IT ON-SITE AT THE LOCATION SHOWN OR BY DISPOSAL AT A LEGAL DISPOSAL SITE.
3. THE EXCAVATED BAY MUD AND SCARIFIED MATERIAL FROM THE UPPER 6" OF ORIGINAL GROUND UNDER NEW LEVEES WHICH IS SPREAD OUT IN LOW AREAS OF THE SLUDGE PASTURE SHALL BE GRADED SMOOTH TO A MAXIMUM 0.005 PERCENT GRADE TOWARD THE SWALE DRAINAGE DITCH USING LASER-GUIDED GRADING CONTROL.

△	REVISED ROADWAY WIDTHS AROUND PONDS, ADDED DISPOSAL SITE, REVISED NOTES 2 AND 3 (ADD #1) 8/16/91
△	AS BUILT SEPT 93

LAS GALLINAS VALLEY SANITARY DISTRICT
Marin County, California

SLUDGE STORAGE POND IMPROVEMENTS

SLUDGE STORAGE PONDS GRADING LAYOUT

NUTE ENGINEERING
SAN RAFAEL, CALIFORNIA

Drawn by: PAM, KR	Job No.: 5498	Scale: 1" = 40'	
Checked by: WEN	5498POND\PLOT1	Date: JUNE 1991	

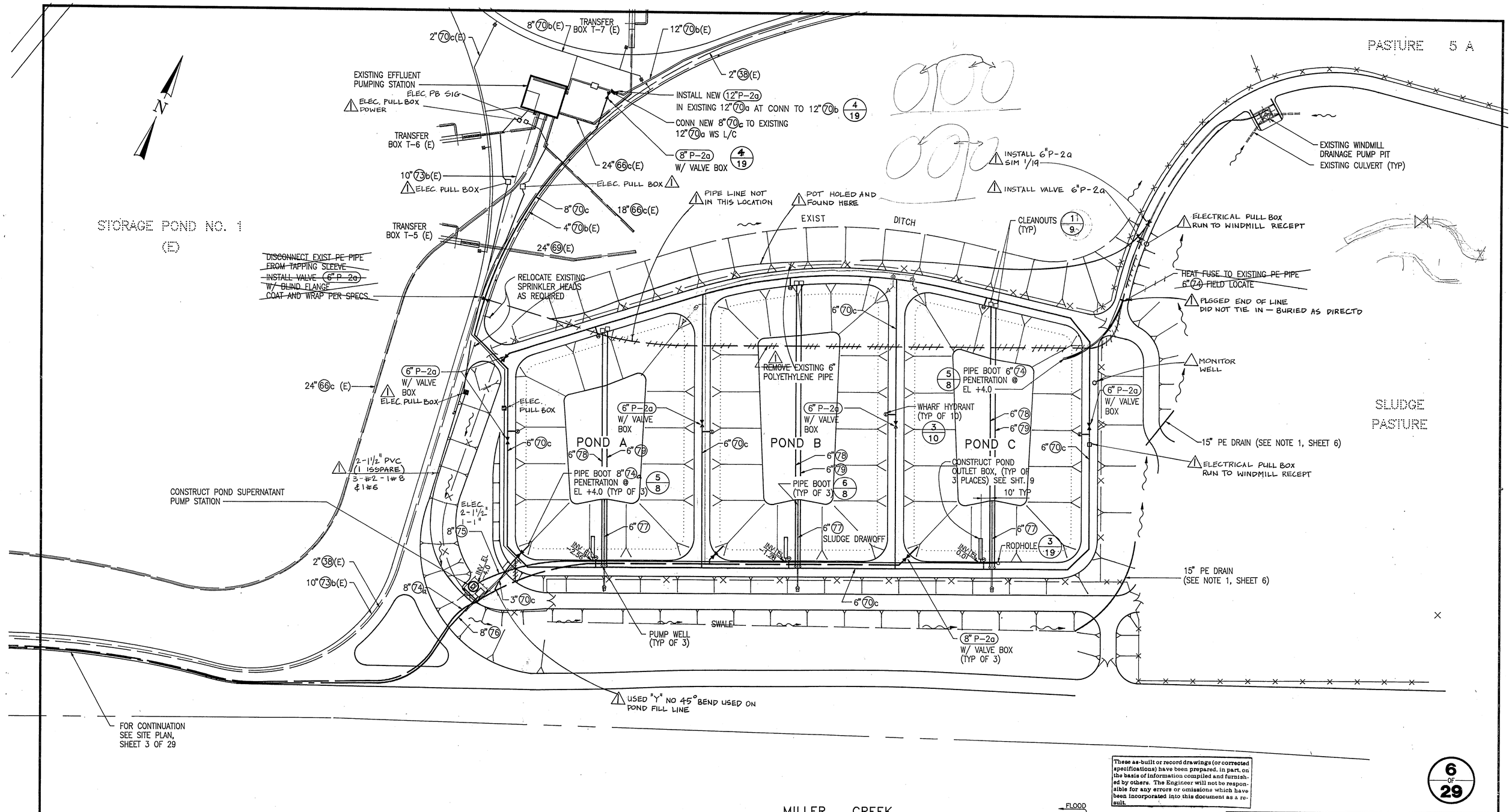

These as-built or record drawings (or corrected specifications) have been prepared, in part, on the basis of information compiled and furnished by others. The Engineer will not be responsible for any errors or omissions which have been incorporated into this document as a result.

6 OF 29

NOTES:

1. EXISTING OUT OF ROUND FLOATING PIPE STORED IN STORAGE POND NO. 1 MAY BE USED FOR THE 15" PE DRAIN PIPES. INSTALL W/ LONG AXIS VERTICAL.

AS BUILT	SEPT 1993

LAS GALLINAS VALLEY SANITARY DISTRICT
Marin County, California

SLUDGE STORAGE POND IMPROVEMENTS

SLUDGE STORAGE PONDS PIPING LAYOUT

NUTE ENGINEERING
SAN RAFAEL, CALIFORNIA

Drawn by:	PAM, KR	Job No.:	5498	Scale:	1" = 40'
Checked by:	WEN		5498POND\PLOT1	Date:	JUNE 1991

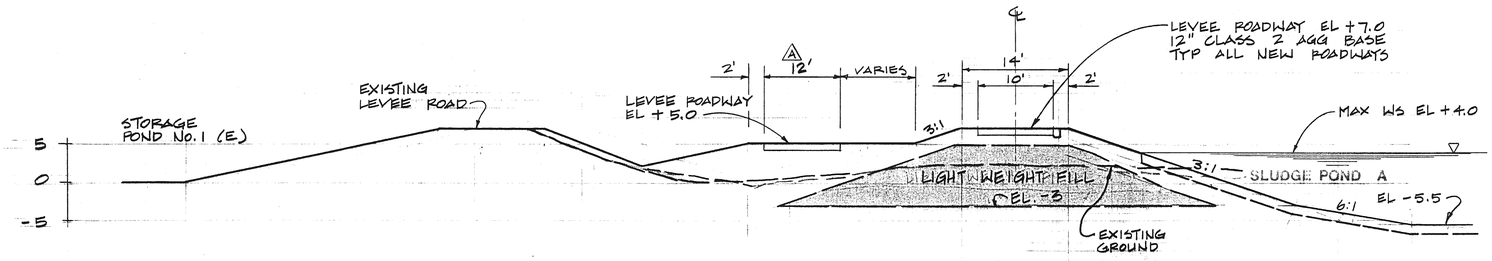

SECTION A/7
SCALE HORIZ: 1" = 10'
VERT: 1" = 10'

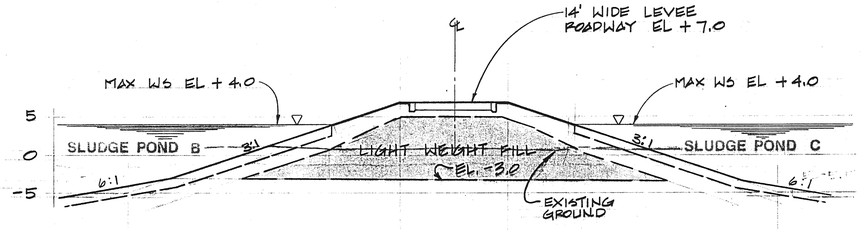

SECTION E/7
SCALE HORIZ: 1" = 10'
VERT: 1" = 10'

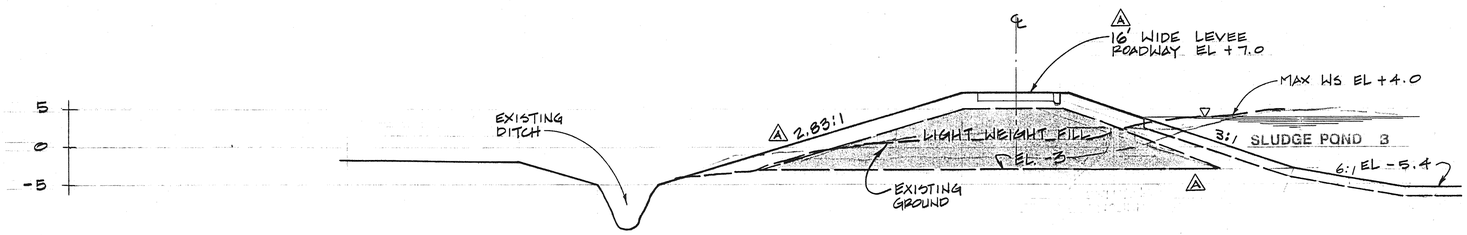

SECTION B/7
SCALE HORIZ: 1" = 10'
VERT: 1" = 10'

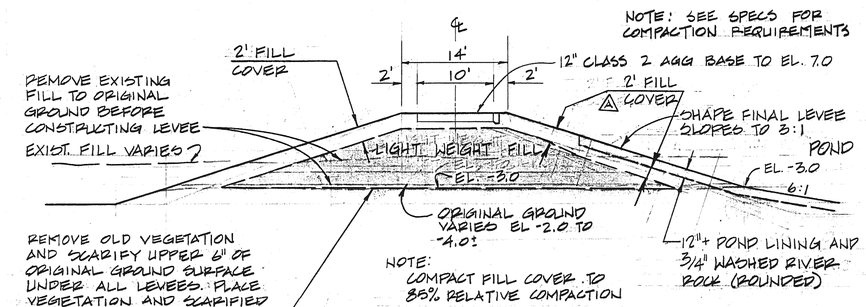

LEVEE AND EMBANKMENT CONSTRUCTION 1/7
SCALE: HORIZ. 1" = 10'
VERT. 1" = 10'

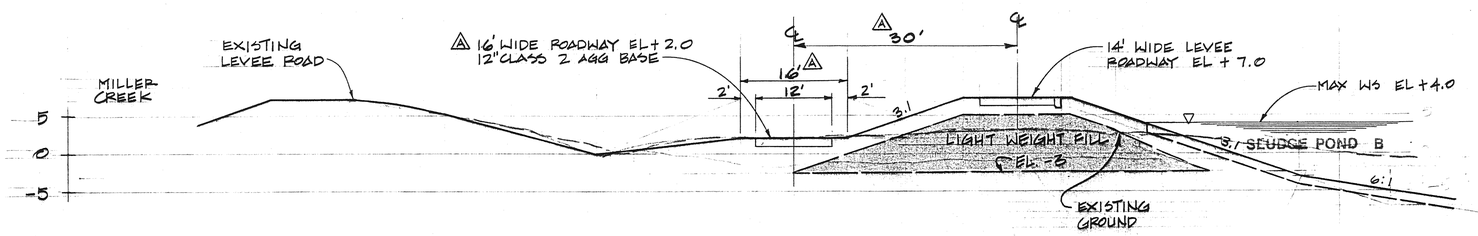

SECTION C/7
SCALE HORIZ: 1" = 10'
VERT: 1" = 10'

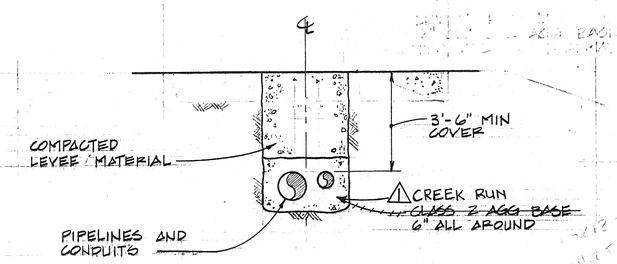

NOTE:
1. PROVIDE 10' LONG COMPACTED CLAY (PI ≥ 20) PLUGS AROUND PIPE & IN TRENCH BACKFILL @ 100' INTERVALS
2. ALL PIPES PENETRATING LEVEES & TO & FROM STRUCTURES SHALL BE BACKFILLED WITH COMPACTED CLAY (PI ≥ 20)

TYPICAL TRENCH SECTION 2/7
N.T.S.

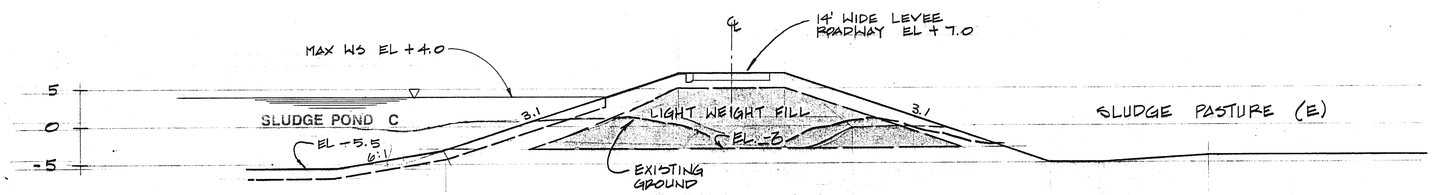

SECTION D/7
SCALE HORIZ: 1" = 10'
VERT: 1" = 10'

7 OF 29

1	AS BUILT	SEPT. 1993
2	REVISED PER ADD#1	8/22/91

These as-built or record drawings (or corrected specifications) have been prepared, in part, on the basis of information compiled and furnished by others. The Engineer will not be responsible for any errors or omissions which have been incorporated into this document as a result.

LAS GALLINAS VALLEY SANITARY DISTRICT
Marin County, California

SLUDGE STORAGE POND IMPROVEMENTS

SLUDGE STORAGE PONDS
CROSS SECTIONS

NUTE ENGINEERING
SAN RAFAEL, CALIFORNIA

Drawn by:		Job No.: 5498	Scale: AS SHOWN
Checked by:	WEN		Date: JUNE 1991

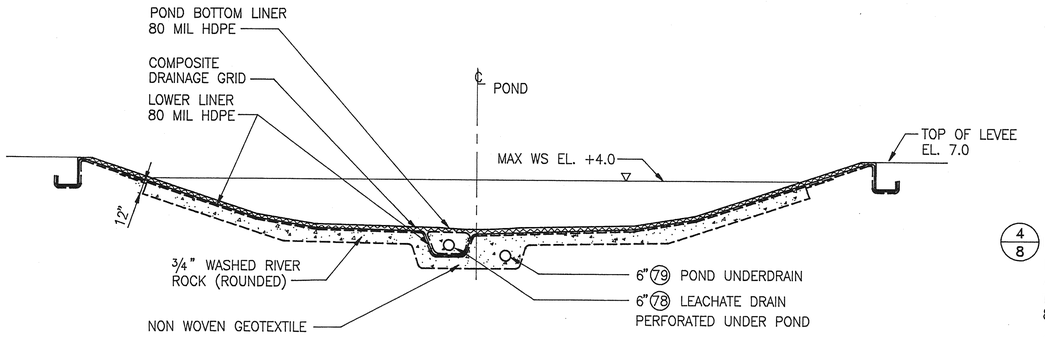

POND LINER DETAIL 1/8

N.T.S.

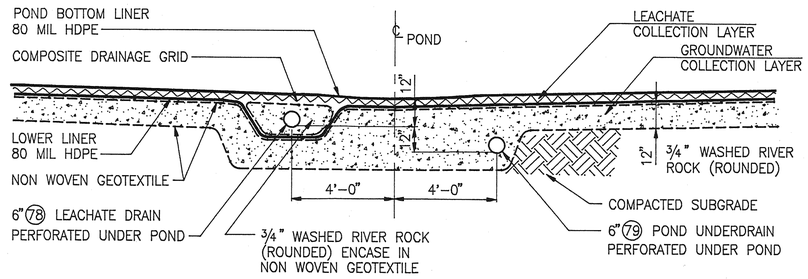

CENTER DRAIN 2/8

N.T.S.

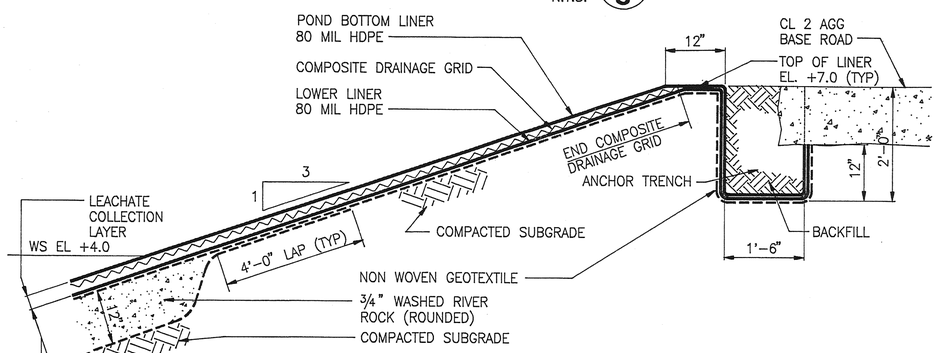

POND LINER TRENCH ANCHORS 3/8

N.T.S.

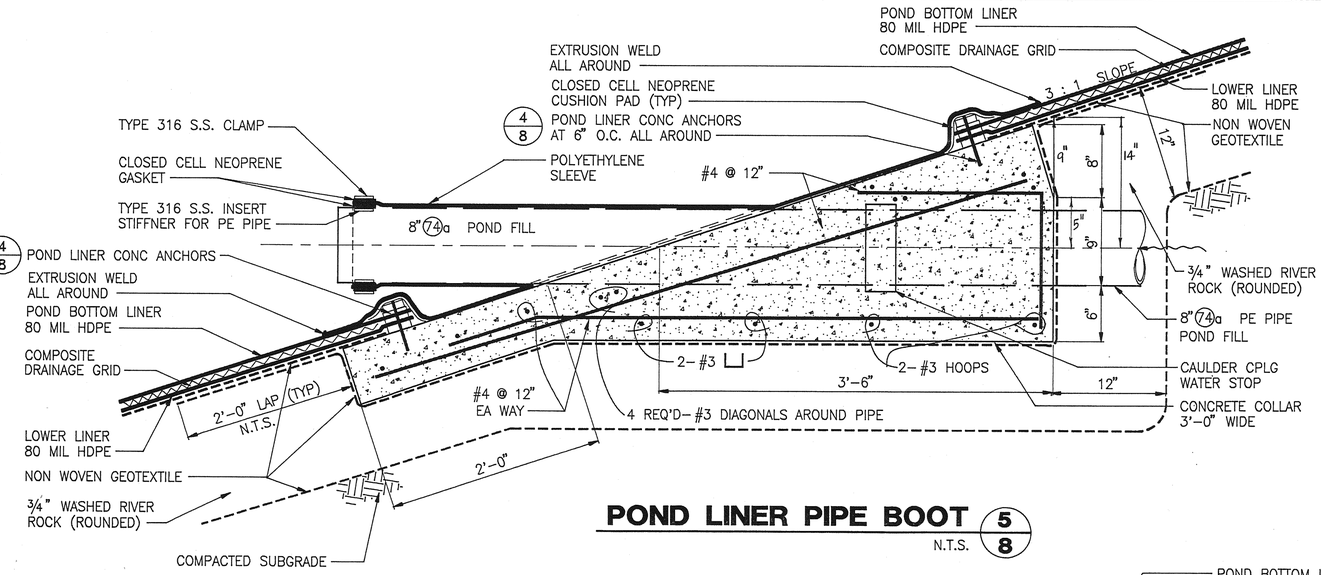

POND LINER PIPE BOOT 5/8

N.T.S.

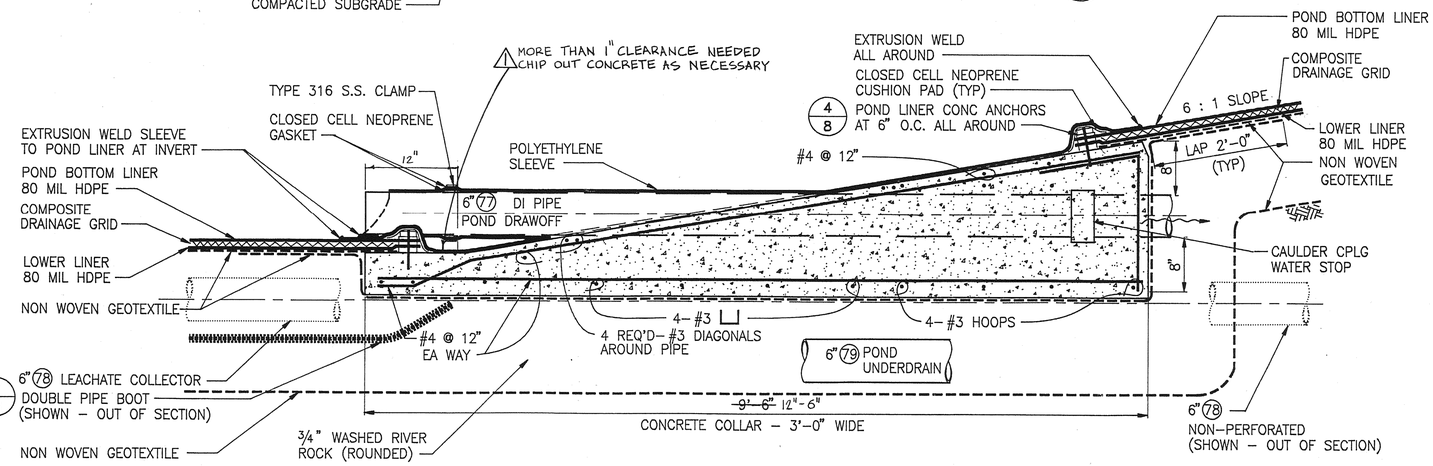

POND LINER DRAWOFF PIPE BOOT 6/8

N.T.S.

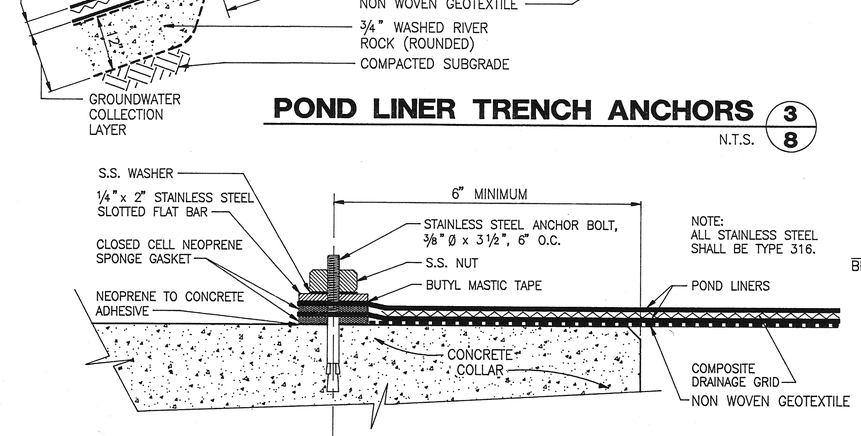

POND LINER CONCRETE ANCHORING 4/8

N.T.S.

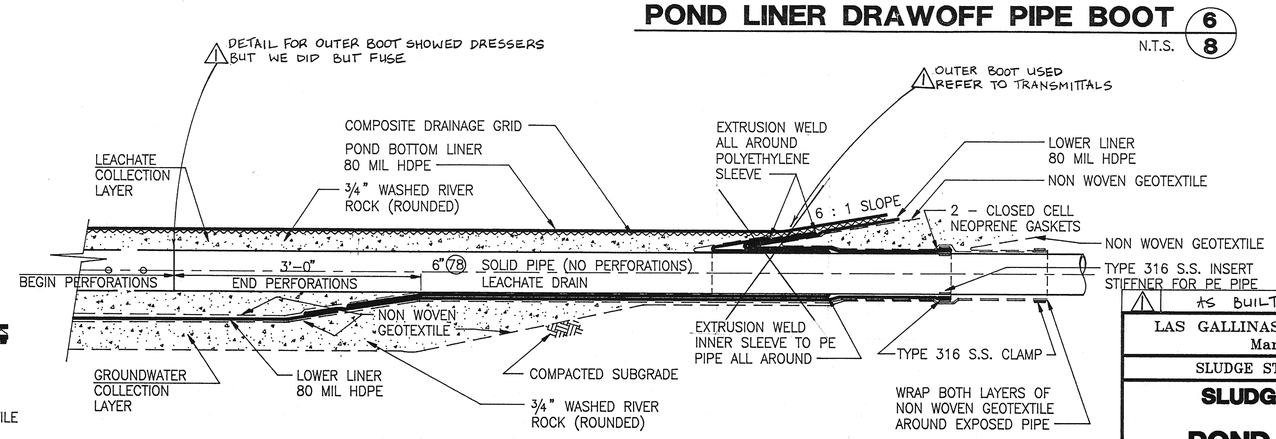

LEACHATE COLLECTOR DOUBLE PIPE BOOT 7/8

N.T.S.

These as-built or record drawings (or corrected specifications) have been prepared, in part, on the basis of information compiled and furnished by others. The Engineer will not be responsible for any errors or omissions which have been incorporated into this document as a result.

8 OF 29

1 AS BUILT	SEPT. 1993

LAS GALLINAS VALLEY SANITARY DISTRICT
Marin County, California

SLUDGE STORAGE POND IMPROVEMENTS

SLUDGE STORAGE PONDS
POND LINER
POND LINER DETAILS

NUTE ENGINEERING
SAN RAFAEL, CALIFORNIA

Drawn by:	PAM, KR	Job No.:	5498	Scale:	AS SHOWN
Checked by:	WEN		5498DTLS\PLOT2	Date:	JUNE 1991

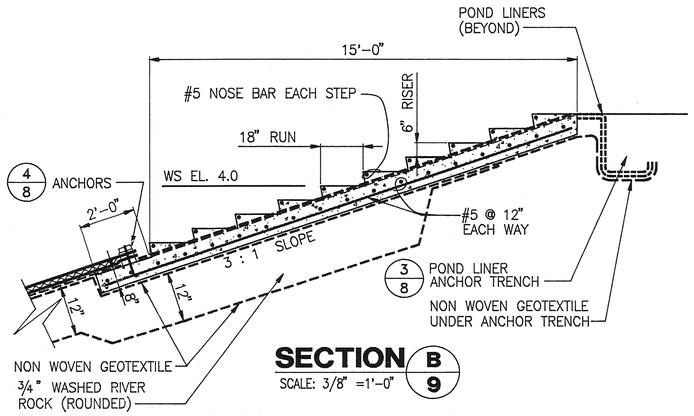

SECTION B/9

SCALE: 3/8" =1'-0"

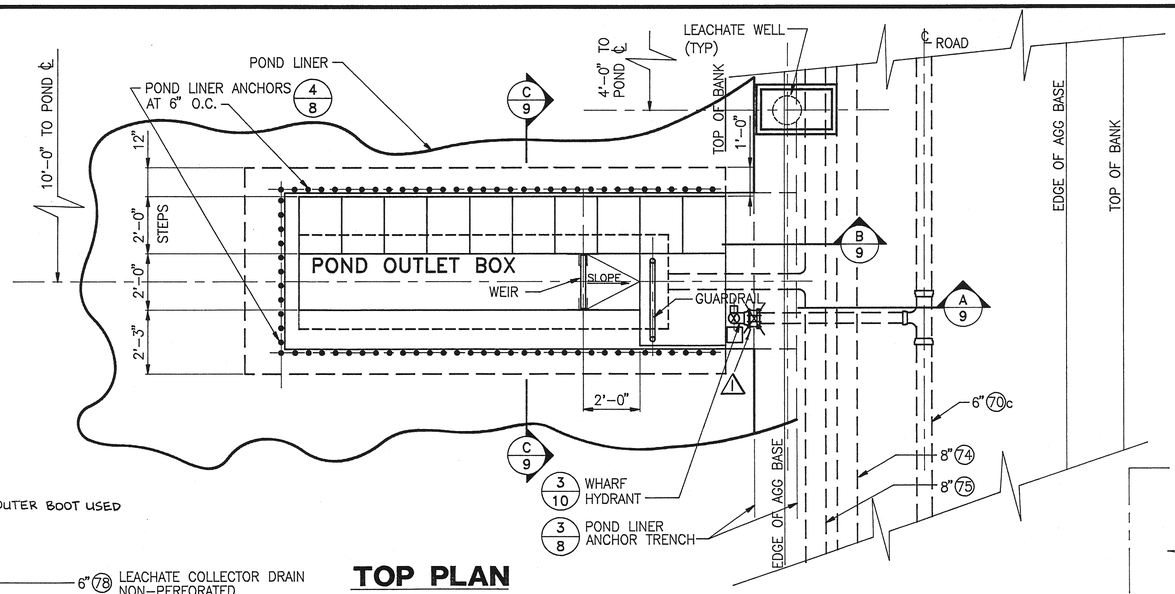

TOP PLAN

SCALE: 3/8" = 1'-0"

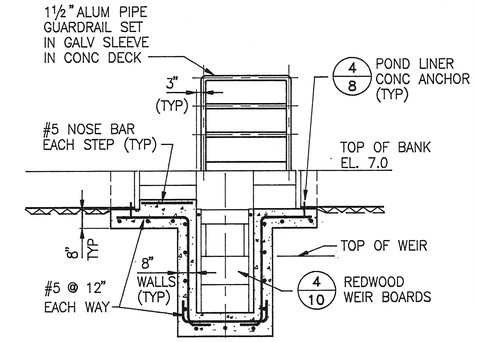

SECTION C/9

SCALE: 3/8" =1'-0"

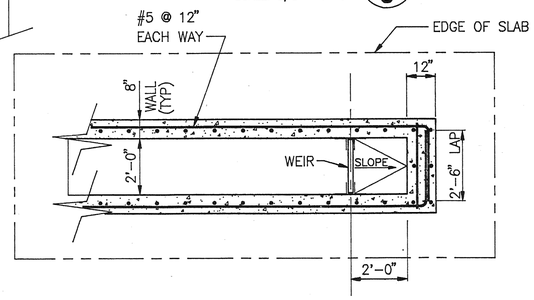

PARTIAL PLAN AT EL. 2.0

SCALE: 3/8" = 1'-0"

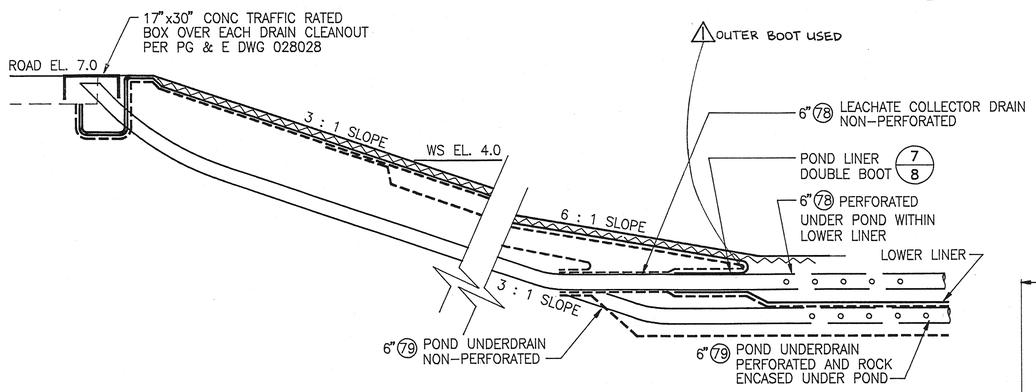

POND DRAIN PIPE CLEANOUT 1/9

N.T.S.

SECTION A/9

SCALE: 3/8" =1'-0"

POND OUTLET BOX

These as-built or record drawings (or corrected specifications) have been prepared, in part, on the basis of information compiled and furnished by others. The Engineer will not be responsible for any errors or omissions which have been incorporated into this document as a result.

NOTES:

ALL PIPES THROUGH CONCRETE SHALL HAVE RUBBER SEAL - FERNCO ADAPTER OR EQ W/ STAINLESS STEEL BAND CLAMP TIGHTEN TO 50 IN LBS.

9 OF 29

⚠	AS BUILT	SEPT 1993

LAS GALLINAS VALLEY SANITARY DISTRICT
Marin County, California

SLUDGE STORAGE POND IMPROVEMENTS

SLUDGE STORAGE PONDS
POND OUTLET BOXES
DETAILS

NUTE ENGINEERING
SAN RAFAEL, CALIFORNIA

Drawn by: PAM, KR	Job No.: 5498	Scale: AS SHOWN	
Checked by: WEN	5498DTLS\PLOT1	Date: JUNE 1991	

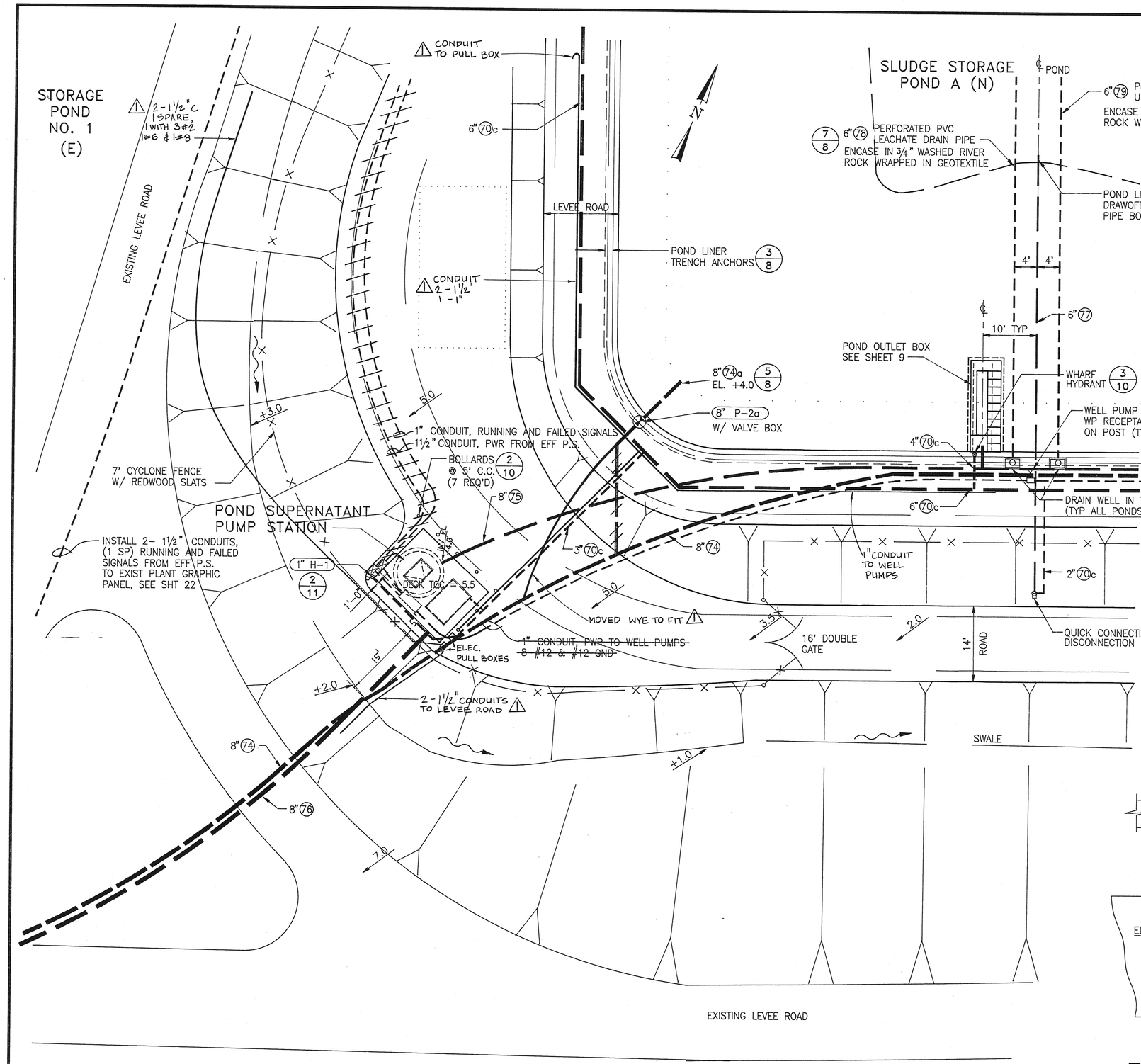

SITE PLAN

SCALE: 1" = 10'

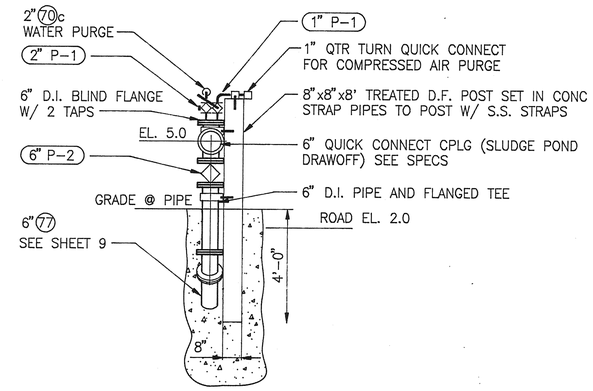

QUICK CONNECTION 1/10

3/4" = 1'-0"

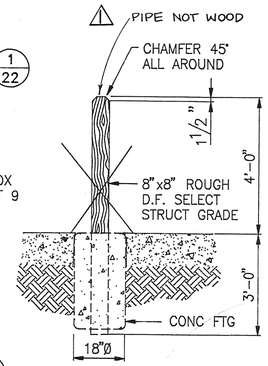

BOLLARD 2/10

N.T.S.

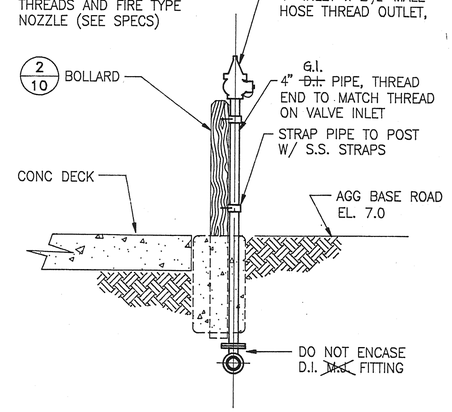

WHARF HYDRANT 3/10

N.T.S.

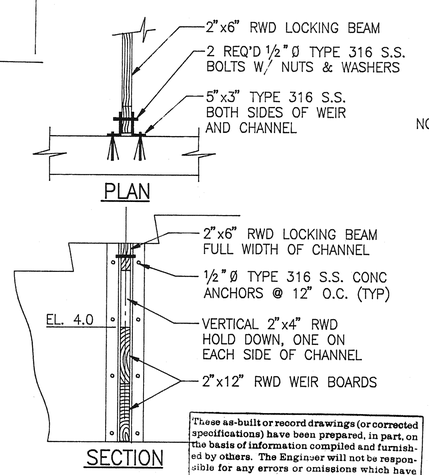

These as-built or record drawings (or corrected specifications) have been prepared, in part, on the basis of information compiled and furnished by others. The Engineer will not be responsible for any errors or omissions which have been incorporated into this document as a result.

REDWOOD WEIR 4/10

3/4" = 1'-0"

NOTE:

ALL WOOD POSTS INSTALLED AS A PART OF THIS JOB SHALL BE D.F. No. 1 OR BETTER. WOOD SHALL HAVE PRESERVATIVE TREATMENT FOR "GROUND CONTACT". EACH POST SHALL BE STAMPED W/ AMERICAN WOOD PRESERVERS BUREAU QUALITY CONTROL STAMP "AWPB LP 22", "AWPB LP 33" OR "AWPB LP 44". FIELD TREAT ALL HOLES, CUTS, OR INJURIES W/ 2 BRUSH APPLICATIONS OF SAME PRESERVATIVE AS FACTORY PRESSURE TREATMENT.

10 OF 29

△	AS BUILT	SEPT 1993

LAS GALLINAS VALLEY SANITARY DISTRICT
Marin County, California

SLUDGE STORAGE POND IMPROVEMENTS

POND SUPERNATANT PUMP STATION
SITE PLAN AND DETAILS

NUTE ENGINEERING
SAN RAFAEL, CALIFORNIA

Drawn by:	PAM	Job No.:	5498	Scale:	AS SHOWN
Checked by:	WEN		5498PS-S\PLOT2	Date:	JUNE 1991

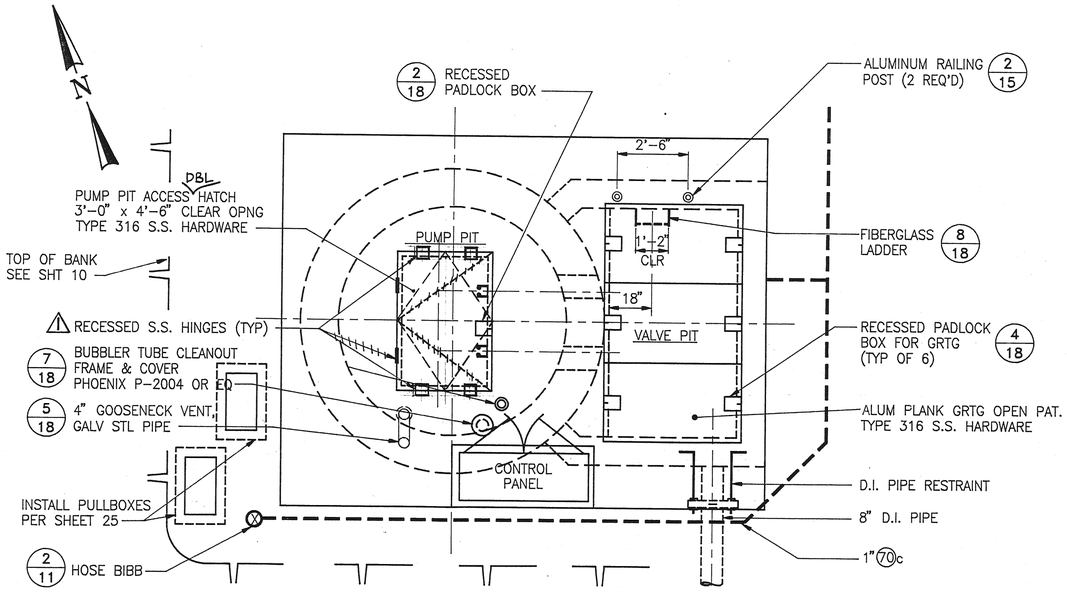

DECK PLAN

SCALE: 3/8" = 1'-0"

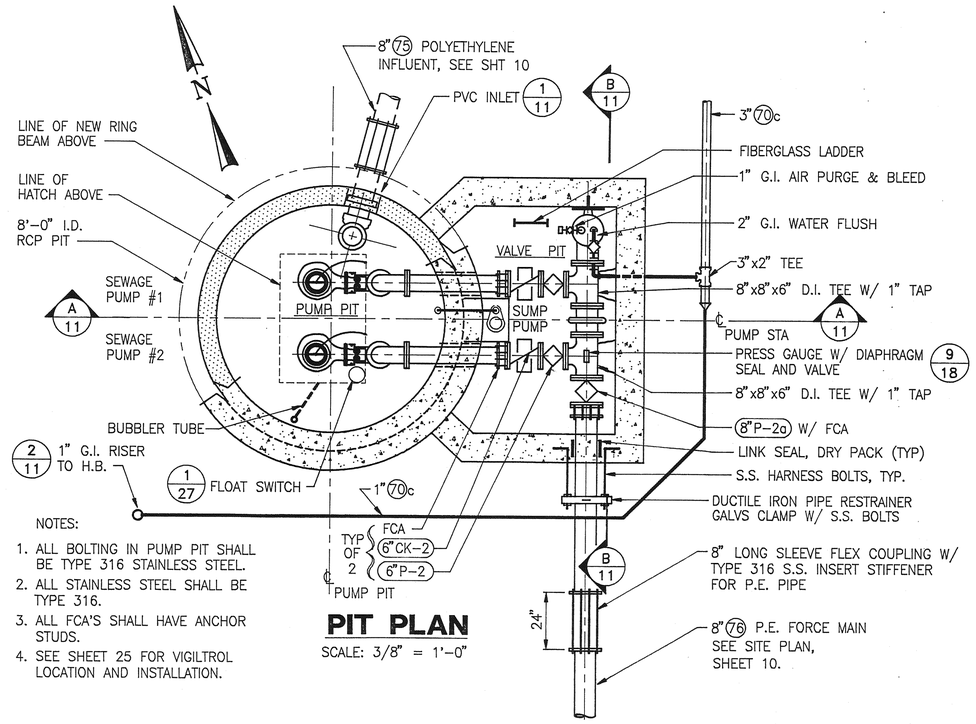

NOTES:

1. ALL BOLTING IN PUMP PIT SHALL BE TYPE 316 STAINLESS STEEL.
2. ALL STAINLESS STEEL SHALL BE TYPE 316.
3. ALL FCA'S SHALL HAVE ANCHOR STUDS.
4. SEE SHEET 25 FOR VIGILTROL LOCATION AND INSTALLATION.

PIT PLAN

SCALE: 3/8" = 1'-0"

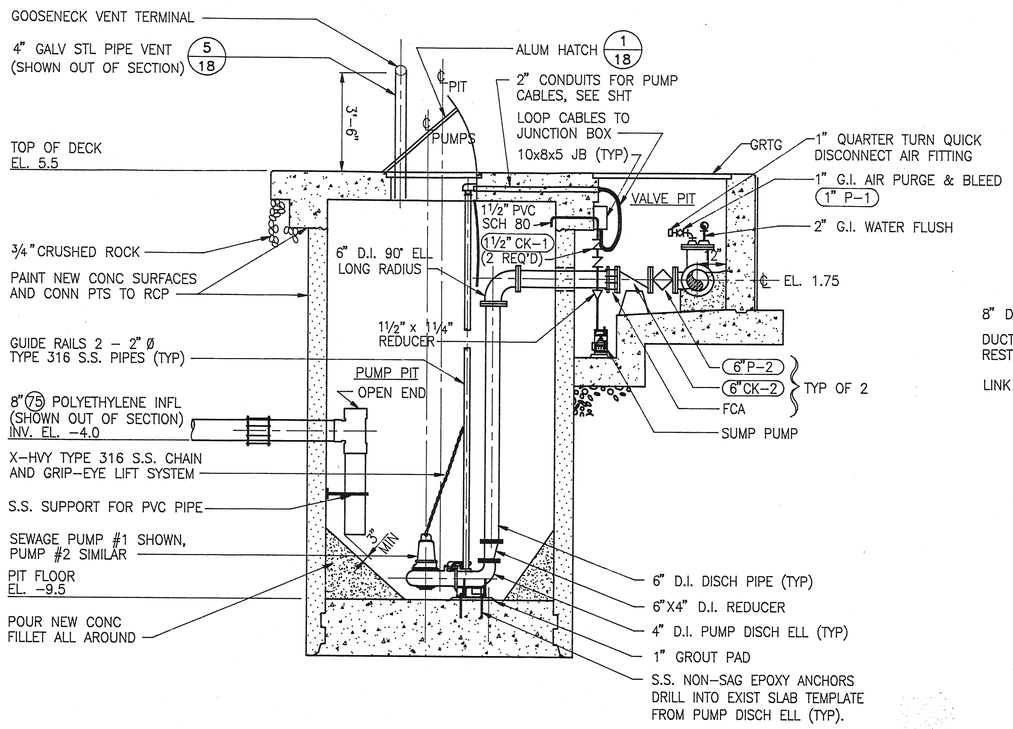

SECTION A 11

SCALE: 3/8" =1'-0"

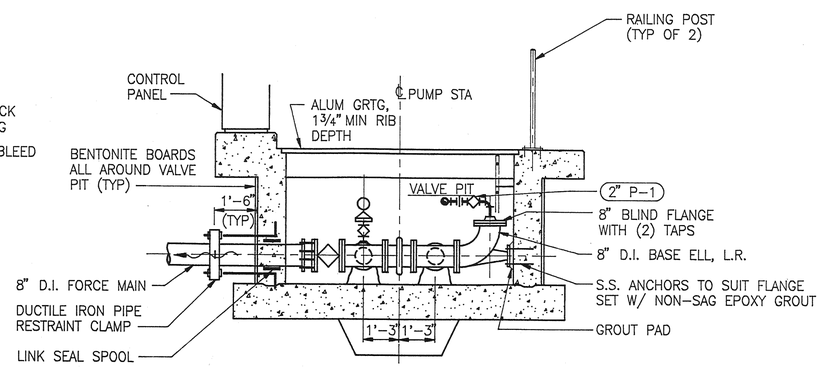

SECTION B 11

SCALE: 3/8" = 1'-0"

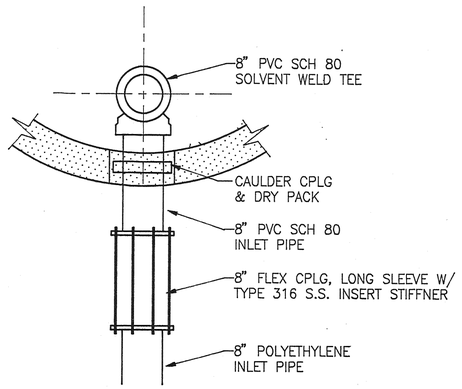

PVC INLET TEE 1 11

SCALE: 3/4" = 1'-0"

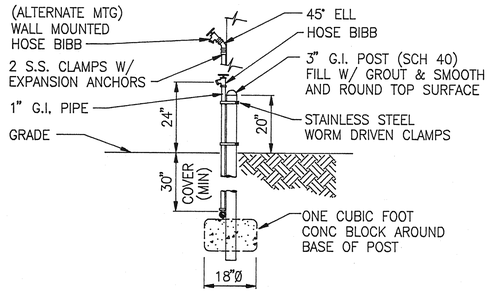

HOSE BIBB 2 11

N.T.S.

11 OF 29

These as-built or record drawings (or corrected specifications) have been prepared, in part, on the basis of information compiled and furnished by others. The Engineer will not be responsible for any errors or omissions which have been incorporated into this document as a result.

1 AS BUILT		SEPT 1993

LAS GALLINAS VALLEY SANITARY DISTRICT
Marin County, California

SLUDGE STORAGE POND IMPROVEMENTS

POND SUPERNATANT PUMP STATION MECHANICAL

PLANS, SECTIONS & DETAILS

NUTE ENGINEERING
SAN RAFAEL, CALIFORNIA

Drawn by:	PAM, KR	Job No.:	5498	Scale:	AS SHOWN
Checked by:	WEN		5498PS-2\PLOT1	Date:	JUNE 1991

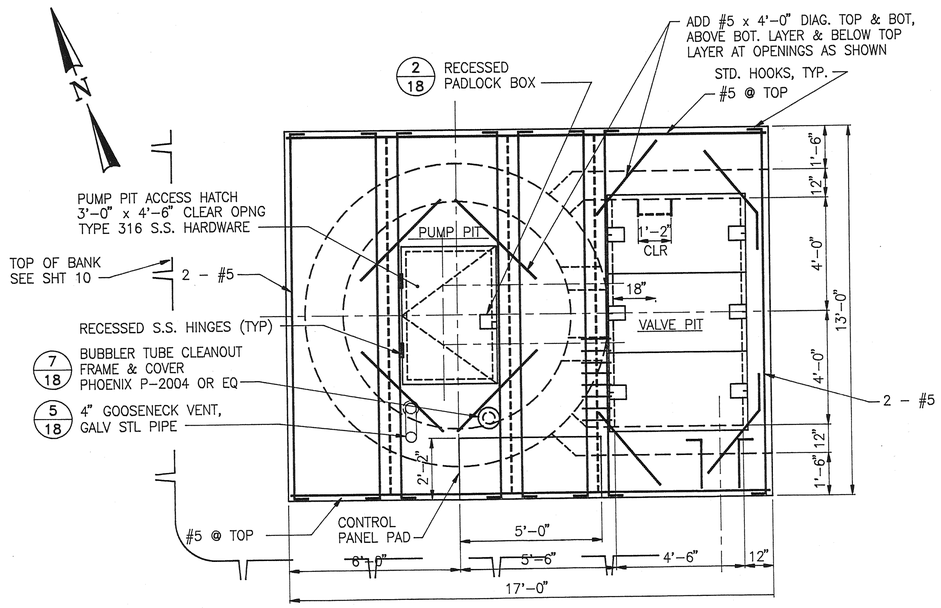

DECK PLAN

SCALE: 3/8" = 1'-0"

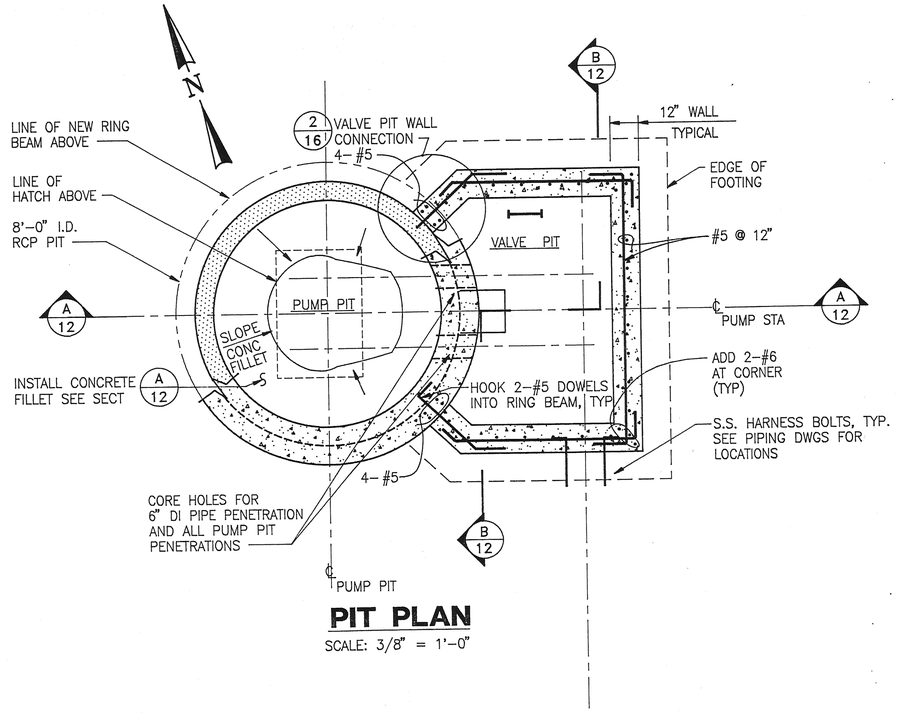

PIT PLAN

SCALE: 3/8" = 1'-0"

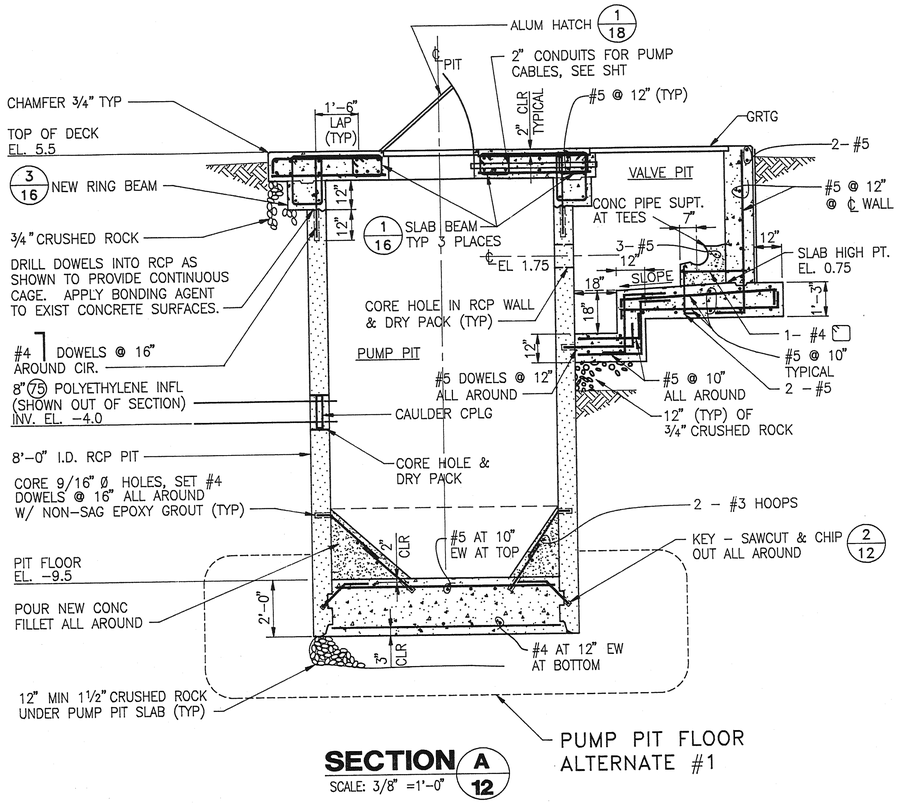

SECTION A/12

SCALE: 3/8" =1'-0"

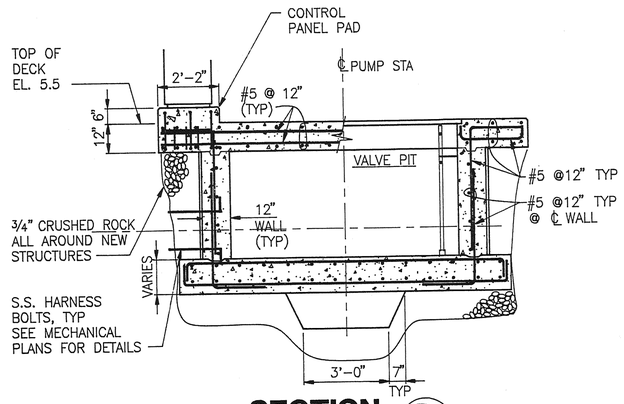

SECTION B/12

SCALE: 3/8" = 1'-0"

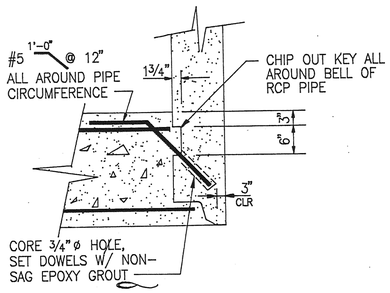

RCP KEY 2/12

3/4" = 1'-0"

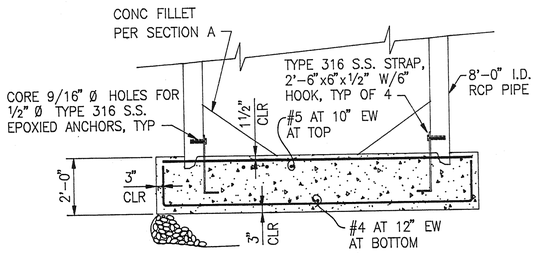

PUMP PIT FLOOR ALT. #2 1/12

3/8" = 1'-0"

12 OF 29

These as-built or record drawings (or corrected specifications) have been prepared, in part, on the basis of information compiled and furnished by others. The Engineer will not be responsible for any errors or omissions which have been incorporated into this document as a result.

1	AS BUILT	SEPT 1993

LAS GALLINAS VALLEY SANITARY DISTRICT
Marin County, California

SLUDGE STORAGE POND IMPROVEMENTS

POND SUPERNATANT PUMP STATION STRUCTURAL

PLANS, SECTIONS & DETAILS

NUTE ENGINEERING
SAN RAFAEL, CALIFORNIA

Drawn by:	PAM, KR	Job No.:	5498	Scale:	AS SHOWN
Checked by:	WEN		5498PS-2\PLOT1	Date:	JUNE 1991

DETERMINATION OF THE TOTAL SOLIDS CONTENT OF SLUDGE SAMPLES FOR SACRAMENTO GEOTEXTILE DEWATERING PROJECT

CONTENT

1. PURPOSE

2. SCOPE

3. PRINCIPLE

4. PROCEDURE DESCRIPTION

4.1 HAZARDS AND SAFETY PRECAUTIONS

4.2 APPARATUS AND REAGENTS

4.3 PROCEDURE

5.0 ABBREVIATIONS

6.0 REFERENCES, DOCUMENTS AND RECORDS

7.0 ATTACHMENTS

8.0 DISTRIBUTION

	Name and Reference or Function	Approval Date
Compiled by: (Author)		
Approved by: (Procedure Owner)		

Draft - for review purposes only

1. PURPOSE

This test is to quantitatively determine the solids content of liquid sludge pumped into geotextile bags for sludge dewatering. The sample results will be used to determine the quantity of dry solids dewatered during a lagoon cleaning. The dry solids determination will be used for billing or progress payments for total amounts removed.

2. SCOPE

This procedure applies to the Sacramento Project to quantify the dry tons removed during geotextile dewatering.

3. PRINCIPLE

The water is removed from a sample to determine the dry content of a sewage sludge sample. Collection of representative samples is a key function of the process.

4. PROCEDURE DESCRIPTION

4.1 Hazards and Safety Precautions

The handling of sewage may present a biohazard. Wash hands thoroughly upon completion of work. If spillage occurs, wear gloves and mop up cautiously with water. Run this to waste with plenty of water. Disinfect the spillage site. For disposal run to waste with large volumes of water.

This procedure is in addition to any [contractor name] Policy and does not supersede any safety requirements or procedures in place.

Be aware and follow safe practices in taking samples while equipment is in operation and of conveyor belts and conveyors. Use caution when walking or being in proximity of any rotating or conveyance equipment.

NEVER USE HANDS TO COLLECT SAMPLE OR PLACE HANDS IN A CONVEYOR OR BELT CONVEYOR.

4.2 Apparatus and Reagents

Apparatus	Reagents

Draft - for review purposes only

1) Latex or plastic gloves 2) 250ml plastic beaker 3) 3-gallon plastic bucket with re-useable tight-fitting lid 4) Suitable plastic paddle for stirring 5) 250ml sample containers with lids 6) Tape and marker to label samples 7) Refrigerator to store daily composites for not for food use. 8) Sample retrieval cup with handle extension 9) Moisture Analyzer calibrated to Good Laboratory Practices.	Not Applicable

4.3 Procedure

Sample Collection Procedure

1. Determine a safe and practical location to obtain a sample from the dredge pipeline. The sample should be retrieved from the same location each event. A sample port will be installed prior to any polymer or treatment. The port will be 1.5 inches in size and fitted to allow a sample to be taken safely and any spillage collected. The location should allow employee to retrieve a representative sample as the sludge is pumped. Inform all employees taking the sample of the location and identify with a number.

2. Take the sample every hour of pumping operation. The sample should be taken during normal operation of the dredge. If unit is not in operation note on the collection log sample not taken due to non-operating

3. Retrieve the sample with the sample cup with handle extension and fill a 250ml beaker

4. The sample is to be placed in a 3-gallon container with a lid. The container is to be stored in a cool location away from direct sunlight and any equipment that generates heat. Complete sample log. Use one 3-gallon composite container only for this purpose. The container will be clearly marked as to its use.

5. At the end of the operational day the sludge sample in the 3-gallon container will be thoroughly mixed to form a composite sample

Draft - for review purposes only

6. From the composite sample fill two 250ml sample containers. Fill the 250ml sample containers. Place one sample in the refrigerator and provide one sample to Sacramento as the Project Manager designates.

7. Label each container with date, time and person who collected the sample and "Sacramento Feed Sample""

8. The daily sample will be tested on the on-site moisture analyzer. The results will be recorded by photo and log sheet and be provided to Sacramento at the end of each operational day. Store the sample in the refrigerator for a minimum of 10 days.

9. A density mini density cup will be used to determine the density to determine the dry tons processed for the day.

10. A photo will be taken of the meter totalizer at the start of the day and the end of the day. The readings will be provided to Sacramento to determine the total gallons pumped for the day.

5. ABBREVIATIONS

6. REFERENCES, DOCUMENTS AND

RECORDS References or Related Documents

Document	Document Description

List of changes

Rev.	Date	Change	Person
01			
01			

7. ATTACHMENTS

Sample Collection Log
Moisture Analyzer
sample log

Draft - for review purposes only

8. DISTRIBUTION

All personnel collecting and analyzing samples on the Sacramento Geotextile Dewatering. Siteshare: .

Draft - for review purposes only

THIS PAGE INTENTIONALLY LEFT BLANK

VOLUME 3
TECHNICAL SPECIFICATIONS

THIS PAGE INTENTIONALLY LEFT BLANK

SECTION 01 10 00

SUMMARY OF WORK

PART 1 GENERAL

1.01 SECTION INCLUDES

A. Definitions.
B. Background.
C. Contract description.
D. Specification conventions.

1.02 DEFINITIONS

A. Agronomist – An expert in soil management and field-crop production with at least 5 years of experience in calculating biosolids application rates in agriculture.

B. Biosolids - Municipal wastewater sewage sludge that has been treated and tested and shown to be capable of being beneficially and legally used as a soil amendment for agriculture, silviculture, horticulture, and land reclamation activities as specified under the Code of Federal Regulations 40 CFR 503.

C. Disposal Site - means the location where any final treatment, utilization, processing, or deposit of wastewater solids occurs.

D. Dry Ton - means a unit of measure used for biosolids based on weight and equal to 2000 lbs. of solids at 100 percent solids and zero percent moisture.

E. Haul Vehicle - means any truck, trailer, semi-trailer, tractor/trailer combination or any self- propelled or motor-driven vehicle used on any public highway for the purpose of transporting wastewater solids for reuse, processing, or disposal.

F. Hazardous Waste - The term Hazardous Waste shall have the meaning provided in Section 1004 of the Solid Waste Disposal Act (42 U.S.C. Section 6906) as amended from time to time and shall mean any material that is subject to the Hazardous Waste Manifest Requirements of the U.S. Environmental Protection Agency specified in 40 CFR Part 262.

G. Land Application – The beneficial reuse of biosolids by the application as a soil amendment at permitted agricultural sites in conformance with all applicable laws and regulations.

H. Laws and Regulations - Any and all applicable laws, rules, regulations, ordinances, codes, and/or orders of any and all governmental bodies, agencies, authorities and courts having jurisdiction.

I. Reuse – Transform, process, or remanufacture materials into beneficial, usable, or marketable materials for use other than that of landfill disposal or incineration as a waste.

J. Site – The District's wastewater treatment plant called the Las Gallinas Valley Sanitary District Wastewater Treatment Plant (WWTP) or other areas designated in the Agreement as being made available by the District to the Contractor for the performance of the services, storage, or access.

K. Ton (or Tonnage) – means a unit of measure for weight equivalent to two thousand (2,000) standard pounds.

L. District – Las Gallinas Valley Sanitary District or a designated representative of the Las Gallinas Valley Sanitary District.

M. Trailer, Haul Trailer - means an end dump semi-trailer with special equipment legally used for the purpose of staging or transporting wastewater solids on any public highway in the State. Trailers must be water-tight end-dump semi-trailers with covers suitable for transporting biosolids.

N. Truck, Haul Truck - means a tandem axle semi-truck tractor legally used for the purpose of transporting a haul trailer loaded with wastewater solids at gross combined weight of a maximum of 80,000 lb. on any public highway in the State.

O. Work - The result of performing or furnishing services, performing or furnishing labor, furnishing and incorporating materials and equipment and furnishing documents, all as required by the Agreement.

P. WWTP – Las Gallinas Valley Sanitary District Wastewater Treatment Plant located at 300 Smith Ranch Road, San Rafael, CA 94903

1.03 PROJECT BACKGROUND

The District owns and operates the Wastewater Treatment Plant (WWTP), located at 300 Smith Ranch Road, San Rafael, CA 94903. The WWTP treats approximately 2 million gallons per day (MGD) average dry weather flow (design capacity is 2.92 MGD ADWF) of mostly municipal wastewater.

Liquid Class B biosolids are generated at the District's WWTP, equating to approximately 407 dry metric tons of biosolids annually. The liquid Class B biosolids are conveyed by pipeline from the WWTP to three (3) Sludge Storage Ponds (i.e., Ponds A, B, and C), which are owned and operated by the District. The District's Sludge Storage Ponds and biosolids land application sites, as well as Dedicated Land Disposal site or "DLD," are located to the northeast of the WWTP (see Volume 4, Figures 1 and 2). The sludge storage ponds have a total surface area of approximately two acres and a total storage capacity of approximately 3.2 million gallons.

The liquid Class B biosolids naturally thicken by gravity while being stored in the Sludge Storage Ponds. Supernatant from the Sludge Storage Ponds overflows by gravity to a wet well where it is pumped back to the WWTP's Headworks facilities.

Historically, about 1.5 million gallons, at four percent solids, have been dredged from the bottoms of the Sludge Storage Ponds annually and subsurface injected on the 9-acre DLD site. In addition, the biosolids material is tested four times per year to confirm compliance with the classification requirements of EPA Code of Federal Regulations, 40 CFR 503,

"Standards for the Use and Disposal of Sewage Sludge" for Class B biosolids.

In July 2022, the District was enrolled under the *General Waste Discharge Requirements for the Discharge of Biosolids to Land for Use as a Soil Amendment in Agricultural, Silvicultural, Horticultural, and Land Reclamation Activities, Order No. 2004-0012-DWQ* (General Order). The District's biosolids land application program is being implemented in accordance with the Notice of Applicability (NOA) issued by the San Francisco Bay Regional Water Quality Control Board on July 1, 2022 and associated Monitoring and Reporting Program (MRP). Copies of the NOA/MRP, which includes a copy of the General Order, are included in Volume 2.

1.04 CONTRACT DESCRIPTION

A. The project work is generally described as:

1. On-site removal and land application (i.e., subsurface injection) of Class B liquid biosolids for one (1) year, with an option to renew services and extend contract for one (1) additional year.

    a. For Year 1, Land application of liquid District biosolids will occur on a parcel of District-owned agricultural land, approximately 66 acres in size, and referred to as APN 155-011-33 or "Land Application Parcel" (See NOA in Volume 2 Appendix G). Based on biosolids land application of DEWATERED (i.e., about 14 percent total solids) Class B District biosolids that occurred in September 2023, about 44 acres of the 66-acre parcel (Land Application Parcel) were found adequate for land application.

    b. A minimum of 2.0 million gallons of District liquid biosolids at approximately four percent total solids shall be dredged from the Sludge Storage Ponds, beginning with Pond B, or as otherwise directed by the District, followed by Pond C, or as otherwise directed by the District. Contractor shall pay special attention during dredging operation as to not damage the existing lining systems of the Sludge Storage Ponds.

    c. The dredged Class B liquid biosolids material shall be land applied (i.e., subsurface injected) in accordance with the General Order and noted sections of the District's NOA/MRP, on Land Application Parcel, with any remaining biosolids to be subsurface injected on the District's permitted 9-acre Dedicated Land Disposal or "DLD" area shown in Volume 4 Figures 1 and 2. Contract shall apply remaining liquid biosolids material to DLD area in accordance with the District's permit for use of that area (see Volume 2 for copy of District's current permit for DLD area).

    d. No wastewater from the Contractor dredging operation or otherwise, shall be returned to any Sludge Storage Pond or to the treatment plant without express written permission from the District.

    e. Conduct sampling

1) Daily sludge flow monitoring on sludge removal days.

2) Collection of daily composite sludge samples on sludge removal days and deliver to the District Lab.

2. One (1) year extension option to renew on-site removal and land application of Class B biosolids services contract.

3. The Contractor shall coordinate with the District on timing of land application activities in relation to active farming and Research Project activities at the land application site (i.e., Land Application Parcel).

4. Contractor to provide additional service of seeding up to approximately 45 acres of the Land Application Parcel after completing land application work. The Land Application Parcel was seeded in rye grass in 2023. Contractor shall seed with rye grass under this service, which is to be included in the Work Plan.

5. The Contractor shall develop and implement a Work Plan (to be reviewed by District), outlining Work to be performed as well as a plan for runoff protection of the District Class B liquid biosolids conveyance system. Contractor to provide a Work Plan for the Work in advance of commencing the Work. The Work Plan shall be provided to the District for review and comment in advance of commencing the Work. Contractor to allow the District up to five (5) Business Days to review Work Plan and provide comments to Contractor. Work Plan shall also include runoff protection plan. Work Plan shall also include Contractor intent to dredge or pump mix from the Sludge Storage Pond(s) (while paying special attention to not damage pond liner system); in either approach, existing cap at Sludge Storage Pond(s) shall remain during Work to mitigate odors.

6. Work Plan shall also include a section outlining the Contractor's proposed methodology for determining the total solids content of the liquid biosolids material (See 1.06, Measurement and Methods; also, an example methodology is included as Appendix I in Volume 2).

B. The Work is located adjacent to the District Wastewater Treatment Plant (WWTP) located at 300 Smith Ranch Road, San Rafael, CA 94903.

C. Dredging of biosolids shall be in accordance with the District's usual annual rotation of ponds for dredging; for Year 1, Ponds B and C shall be dredged in that order or as directed by the District.

The Contractor shall maintain compliance with applicable requirements of all federal, state and local laws and regulatory agencies having jurisdiction over activities covered under this Agreement, including, but not limited to the regulatory requirements in effect as of the commencement of this Contract. The Contractor shall be responsible for obtaining all regulatory permits and approvals for executing the Work in accordance with all permits, laws, and regulations.

1. Bay Area Regional Water Quality Control Board Discharge Permit ORDER No. R2-2020-0022/ NPDES No. CA0037851

2. Land application of stored District Class B liquid biosolids shall be in accordance with:

a. Applicable Sections of the District's *Notice of Applicability* (NOA) (Volume 2, Appendix G), specifically, NOA Section V, "Site Specific and Other Site Requirements."

b. District's *Monitoring and Reporting Program* (MRP) (Volume 2, Appendix G), specifically, MRP Section V.A, "Biosolids Monitoring, Table 1," with the exception of any parameter frequency noted in the table as "once every 5 years;" MRP Section V.B, "Routine Field Monitoring;" and MRP Section V.C., "Soil Monitoring."

c. EPA's Wastewater Solids Rule, Code of Federal Regulation (CFR) Part 503, *Standards for the Use or Disposal of Sewage Sludge*;

d. California State Water Resources Control Board (SWRCB) Water Quality Order No. 2004-12-DWQ (General Order), *General Waste Discharge Requirements for the Discharge of Biosolids to Land for Use as a Soil Amendment in Agricultural, Horticultural, and Land Reclamation Activities*

3. Paint Filter Liquid Test as defined by Method 9095B, included in "Test Methods for Evaluating Solid Waste, Physical/Chemical Methods" (EPA Publication SW-846), per 40 CFR Part 258.28.

4. Local waste disposal and wastewater solids land application requirements for the reuse and disposal sites.

E. Contractor to provide all equipment; the District does not possess biosolids dredging, or land application equipment. Contractor shall pay special attention during dredging/biosolids removal operations so as to not damage existing lining systems in the Sludge Storage Ponds.

F. Contractor shall prepare and submit a Work Plan for District review in advance of commencing Work. Contractor shall allow District five (5) Business Days to review the Work Plan and provide comment.

1.05 RESEARCH PROJECT COORDINATION

Land application activities shall be coordinated with Research Project activities. Contractor shall provide support for the collaboration and coordination with a three-year Research Project (Unregulated Organic Chemicals in Biosolids: Prioritization, Fate and Risk Evaluation for Land Applications | Research Project Database | Grantee Research Project | ORD | US EPA) currently being conducted on District property where land application of biosolids will occur. Assume level of effort responding to up to two (2) requests for information or up to eight (8) hours for collaboration, including requests for Contractor to pull liquid biosolids samples for the Research Project (note: District will provide needed sampling bottles and manage shipment of the bottles and any analytical testing associated with the Research Project.

1.06 MEASUREMENT METHODS

Q. The wet tonnage of material shall be converted to a dry weight basis through a percent total solids analysis to be performed by Contractor. The average percent solids of each load hauled/transported from the Sludge Storage Ponds to the land application site shall be estimated based on a daily four-point composite sample collected by the Contractor from the discharge of the pumping/dredging system or from the conveyance system prior to discharge of the Class B liquid biosolids to the land application site.

R. The Contractor shall be responsible for the Work to collect, preserve, and prepare the samples for laboratory analysis by methods approved by the District. The work shall include handling, compositing, packaging, labeling, preparing custody documents, and transferring the collected samples to the state-certified lab, and payment of the analytical

costs for the testing of percent solids samples. Results from the laboratory analyses will be provided by the laboratory to both the Contractor and the District.

S. The Contractor shall submit a load summary to the District for review and approval that uses the daily percent solids test results multiplied by the daily wet tons of biosolids removed from the WWTP to calculate the daily dry tons of biosolids.

T. The Contractor shall submit the invoice for payment on a monthly basis that shall include an invoice summary, a load log summary for all wastewater solids hauled, copies of weight tickets, and other data as necessary to support the request. The Contractor shall include other required Project reports with the invoice. At the District's request, the Contractor shall submit the complete invoice as a digital file and data tables as spreadsheets in Microsoft Excel-compatible format for the District's review. The District will process the approved invoice after satisfactory review of the payment request, the summary of total waste transported, and the data and supporting documents.

1.07 SPECIFICATION CONVENTIONS

A. These specifications are written in imperative mood and streamlined form. This imperative language is directed to the Contractor, unless specifically noted otherwise. The words "shall be" are included by inference where a colon (:) is used within sentences or phrases.

PART 2 PRODUCTS (Not Used.)
PART 3 EXECUTION (Not Used.)

END OF SECTION

SECTION 01 14 00

COORDINATION AND SITE CONDITIONS

PART 1 GENERAL

1.01 SECTION INCLUDES

A. Requirements for coordinating and sequencing the work under the Contract, and requirements regarding existing site conditions.

1.02 SITE CONDITIONS

A. Information On Site Conditions:

1. General: Information obtained by the District from other sources regarding site conditions, topography, subsurface information, groundwater elevations, existing construction of site facilities as applicable, and similar data will be available for inspection at the office of the District upon request. Please note that the Sludge Storage Ponds are lined and the lining is nearing the end of its useful life. It is therefore imperative that the Contractor pay special attention during its Work so as to not damage the lining system. The District assumes no responsibility for its accuracy or completeness or for the Contractor's interpretation of such information.

2. The Land Application Parcel and Sludge Storage Ponds located near the WWTP are adjacent to protected creeks and wetland areas. No Contractor personnel, vehicles, debris, materials, equipment, biosolids, or pollutant of any kind from the Work shall be allowed into the creeks or wetland areas, unless otherwise directed by the District. **The Contractor shall prevent spills or storm water runoff from the Contractor's activities or the Biosolids Handling Area from draining toward any creek or wetland area. The Contractor shall contain and restrict all construction activities as necessary to protect the creeks, wetlands, wildlife habitat, waters of the State of California, and waters of the U.S., and shall be held responsible for, and shall pay all fines and other costs associated with, infractions of environmental regulations regarding these types of waters and habitats.**

3. To gain entry to District property where Work is to be performed, access will require crossing of a single-lane bridge with a weight capacity/limit of 40 tons (U.S. standard tons). If an alternative access road is needed by the Contractor, the District will facilitate entrance to the District's property through an alternative access road(s) under ownership and control of a neighboring third-party. Special conditions may apply to Contractor's use of the alternative access road(s) including, but not limited to, restricted hours of access/use and frequency of access/use, restricted speed limit(s), requirement for Contractor to assume expanded liability of the alternative access road(s) to repair any damage to the alternative access road(s)

caused by Contractor (i.e., letter on Contractor letterhead assuming responsibility to return/restore access road(s) to original condition prior to Contractor beginning Work), and direct written (i.e., email) coordination by Contractor between Contractor and third-party of changes with copy to designated District personnel.

B. Coordination with the District's Wastewater Treatment Plant (WWTP)

1. The project site is located within the vicinity of the WWTP. The Contractor shall coordinate all Work with the District's Wastewater Treatment Plant Supervisor/Manager. The Contractor shall not in any way impede or impair the operation of the treatment plant. If, in the opinion of the Wastewater Treatment Plant Supervisor/Manager, the Contractor's operation is impeding or impairing the operation of the treatment plant or is the cause of legitimate complaints from the public, the District reserves the right to temporarily stop the Work, at no cost to the District.

2. The District's treatment plant operators, other contractors, and other utility personnel may be working within the project area while the Contract Work is in progress. If so, the Contractor shall allow access to existing facilities at all times and shall schedule their work in conjunction with these other organizations to minimize mutual interference.

1.03 WORKDAYS AND HOURS

A. Working hours at the project site shall be between 6:30 a.m. and 3:30 p.m. Extended daily work hours may be requested by the Contractor in writing for review and approval by the District.

B. Work hours specified by other governing agencies through permits shall be the responsibility of the Contractor.

C. Haul vehicle traffic to and from the project site shall be allowed between the hours of 6:30 a.m. and 3:30 p.m. to avoid truck traffic disturbances for the public along the haul route. The allowable hours for haul vehicle operation on the site may be restricted by the District if necessary to prevent operational conflicts at the WWTP.

D. If Contractor elects to use alternative road(s) for access to the project site, this may impact days of Work and hours of Work, which will be defined between the Contractor, District, and third party prior to Contractor commencing Work.

E. The Contractor is allowed to conduct work for this Contract at the project site on any day except Saturdays, Sundays, and official District holidays. All construction activities associated with the Work, except for emergency situations, shall be conducted on working days only, and no work shall be conducted on Saturdays, Sundays or District holidays. If special circumstances require construction outside these days and hours, the Contractor shall submit a written request to work at additional times to the District for review and approval.

F. Except in the event that extra work is ordered by the District, the Contractor shall receive no additional compensation for overtime work, i.e. work in excess of 8 hours in any one calendar day, 40 hours in any one calendar week, or on Saturdays, Sundays, or holidays, even though such overtime work may be required to complete the Work. However, the

Contractor will be required to comply with the requirements of the State Prevailing Wage regulations.

1.04 CONSTRUCTION SCHEDULE

A. Once the specific event window has been defined (see 1.05), the Contractor shall submit a preliminary project schedule as part of its Work Plan that indicates in chronological order the anticipated starting and completion date of each phase of the work and intermediate tasks needed to define the progress of the Work. The Contractor shall be prepared to schedule their work in coordination with the District to accommodate any other capital improvement projects that may be taking place elsewhere in the WWTP during the biosolids removal and land application event.

B. The Contractor shall submit an updated project schedule prior to each stage of the work and provide the current schedule to District staff approximately monthly.

1.05 REMOVAL EVENT SCHEDULE

Removal Event(s) Year	Contract Year	Earliest Start Date	Latest Completion Date	Estimated Quantity of Biosolids to be Removed
2024	2024	June 1, 2024	Land application shall be completed no later than October 31, 2024, with subsurface injection at DLD completed at the same time.	Land application by subsurface injection of up to 264 Dry Tons contained in a volume of up to 1.5 million gallons of stored District Class B liquid biosolids material, and DLD subsurface injection of up to an additional 500,000 gallons of stored District Class B liquid biosolids material.
Notes: **1. Dry Tons = Equivalent to 2,000 lbs. of solids at 100% solids, zero % moisture.** **2. Average percent dry solids for biosolids in the sludge storage ponds is 4 percent (i.e., 40,000 mg/L total solids)**				

1.06 EXISTING UTILITIES

1.06.1 Existing Utilities Contractor's Responsibilities:

Where Contractor's operations could cause damage or inconvenience to railway, telegraph, telephone, television, power, oil, gas, water, sewer, or irrigation systems, the Contractor shall make arrangements necessary for the protection of these utilities and services. Replace existing utilities removed or damaged during construction, unless otherwise provided for in these Contract Documents.

Notify utility offices that are affected by construction operations at least 48 hours in advance. Under no circumstances expose any utility without first obtaining permission from the appropriate agency. Once permission has been granted, locate, expose, and provide temporary support for the utilities. Contact Underground Services Alert (U.S.A.) at telephone number 1-800-227-2600 for marking prior to digging.

A. Names of known Utilities: Notify the following applicable utilities if conflicts or emergencies arise during the work:

Gas Mains and Services:

PG&E Engineering: Jason Conihar at (415) 257-3404 or
Mindee Rayburn at (415) 257-3405

Emergency at (800) 743-5000

Electrical Utilities:

PG&E

Service Planning: (415) 257-3431 or
Al Caballero at (415) 257-3174

Emergency: (800) 743-5000

Telephone Utilities:

SBC/AT&T: Debbie Barrios at (707) 575 2077
or (707)321 6207

Emergency: (800) 310-2355

Marin County Public Works Department:

Front Desk: (415) 499-6530

City of San Rafael:

Front Desk: (415) 485-3355

Marin Municipal Water District:

Front Desk: (415) 945-1400

Comcast:

Customer Service: (866) 690 6996

C. Interfering Structures:

1. Take necessary precautions to prevent damage to existing structures whether on the surface, aboveground, or underground. An attempt has been made to show major structures on the Drawings. While the information has been compiled from the best available sources, its completeness and accuracy cannot be guaranteed.

2. Protect existing structures from damage, whether or not they lie within limits of easements obtained by the District. Where existing fences, gates, barns, sheds, buildings, or other structure must be removed to properly carry out work, or are damaged during work, restore them to original condition and to the satisfaction of property District.

3. Contractor may remove and replace in equal or better than original condition, small structures such as fences, mailboxes, and signposts that interfere with Contractor's operations.

D. Field Relocation:

1. During construction, it is expected that minor relocations of proposed facilities will be necessary. Make such relocations only by direction of the District. If existing structures are encountered that prevent construction as shown, notify the District before continuing with work so District may make necessary field revisions.

2. Where shown or directed by and acceptable to the District provide relocation of existing facilities to include piping, utilities, equipment, structures, electrical conduit wiring, electrical duct bank, and other miscellaneous items. Use only new materials for relocation of existing facilities. Match materials of existing facilities, unless otherwise shown or specified. Perform relocations to minimize downtime of existing facilities. Install new portions of existing facilities in their relocated position prior to removing existing facilities, unless otherwise accepted by District. Comply with cutting and patching requirements in this section.

E. Monuments and Markers:

1. Preserve and protect survey monuments and markers throughout construction. If damage occurs or removal becomes necessary, immediately notify District.

2. All survey markers or monuments which are damaged or removed as a result of the Contractor's operations will be reset by the District at the Contractor's expense.

3. In order to allow for properly referencing any existing survey monuments or markers which may be damaged or removed, the Contractor shall provide the District with a minimum of 10 working days' notice before proceeding with any work which might damage or remove any existing markers.

F. Easements:

1. Where portions of work will be located on public or private property, easements and permits have been obtained by District. Easements will provide for use of property for construction purposes only to the extent indicated on easements. Copies of these easements and permits will be available from District for inspection. Contractor shall determine the adequacy of easements obtained and abide by easement provisions. Confine construction operations to within easement limits or make special arrangements with property owners or appropriate public agency for additional area required.

2. Before final payment will be authorized, Contractor shall furnish the District written releases from property owners or public agencies where side agreements or special easements have been made, or where Contractor's operations have not been kept within the District's construction right-of-way or property.

3. In the event Contractor is unable to secure written releases, inform the District of the reasons.

   a. District or its representatives will examine the site, and District will direct Contractor to complete work that may be necessary to satisfy terms of the easement.

   b. Should Contractor refuse to do this work, District reserves the right to have it done by separate contract and deduct the cost of same from the Contract amount, or require the Contractor to furnish a satisfactory bond in a sum to cover legal claims for damages.

   c. When District is satisfied that work has been completed in agreement with the Contract Documents and terms of easements, the right is reserved to waive the requirement for written release if:

      1) Contractor's failure to obtain such statement is due to the grantor's refusal to sign, and this refusal is not based upon any legitimate claims that Contractor has failed to fulfill the terms of the easement, or

      2) Contractor is unable to contact or has had undue hardship in contacting the grantor.

PART 2 PRODUCTS (Not Used)

PART 3 EXECUTION (Not Used)

PART 4 PAYMENT

4.01 GENERAL

A. Full compensation for the work specified herein shall be considered as included in the applicable lump sum or unit price items stated in the Contactor’s proposal and no additional compensation will be allowed therefor.

END OF SECTION

SECTION 01 30 00

ADMINISTRATIVE REQUIREMENTS

PART 1 GENERAL

1.01 SECTION INCLUDES

A. Construction meetings.

B. Project Reports

C. Special procedures.

1.02 PRECONSTRUCTION MEETING

A. Architect/Engineer will schedule meeting after Notice of Award.

B. Attendance Required: Architect/Engineer, Owner and Contractor, and agenda to include:
1. Submission of executed bonds and insurance certificates.
2. Distribution of Contract Documents.
3. Submission of list of Subcontractors, list of products, schedule of values, and progress schedule.
4. Designation of personnel representing parties in Contract and Architect/Engineer.
5. Procedures and processing of field decisions, submittals, substitution, applications for payments, proposal request, Change Orders, and Contract closeout procedures.
6. Scheduling.

C. District will Record minutes and distribute copies after meeting.

1.05 PROGRESS MEETINGS

A. District will schedule regular progress meetings at least weekly to review work progress, schedules, and other matters needing discussion and resolution. The Contractor shall attend progress meetings for this Contract at the jobsite or another site selected by the District. The purpose shall be to review progress and schedule work activities.

1.06 PROJECT REPORTS

B. The Contractor shall maintain a haul or conveyance log in a format approved by the District (haul/conveyance log template to be included in Contractor Work Plan) for each truck load of liquid biosolids and/or quantity of biosolids conveyed by other means (e.g., pumping; pipeline) prior to conveying/transporting the liquid biosolids from the Sludge Storage Pond area to the Land Application Parcel, or as approved by the District. The haul or conveyance log shall be available at all times for review by the District.

C. The Contractor shall submit a progress report at least once a week at the progress meeting or as a part of the weekly progress review as required by the District, in a form agreed upon by the Contractor and the District (form of progress report to be included in Work Plan). The progress report shall include a description of the work completed, the haul/conveyance log, documentation of safety training, injuries, accidents, weather conditions, and other related information involved in the performance of the Work, problem areas, delaying factors, completion dates, and an explanation of corrective actions taken or proposed.

D. The Contractor shall submit weekly and annual biosolids activity reports identifying amounts and disposition of liquid biosolids removed from the Sludge Storage Ponds and land applied by subsurface injection at the Land Application Parcel and/or disposed of by subsurface injection at the DLD area, land application and disposal sites information, application rate, processing site information (e.g., area in vicinity of Sludge Storage Ponds), and other information. Annual activity reports shall be submitted to the District for review and approval prior to December 31 in the calendar year during which the work was conducted.

PART 2 PRODUCTS

Not Used.

PART 3 EXECUTION

3.01 Project Work Plan

Within ten (10) calendar days after the date of the Notice of Award, the Contractor shall submit a Project Work Plan. The Project Work Plan shall include the following information:

A. A description of the proposed methods of project execution including mobilization, site setup, Sludge Storage Pond biosolids extraction, handling, hauling, conveying, and biosolids beneficial use through land application, supplemented by disposal at the DLD area, as well as seeding plan.

B. Type, size, number and capacity of all equipment proposed for the dredging, loading, hauling, conveying, land application and disposal.

C. An example of the format and description of the procedure to be used for producing weekly trailer haul or conveyance logs. The haul or conveyance log shall include date, liquid biosolids ticket number, origin of biosolids, trip destination, trailer license number, truck license number, trucking subcontractor (if applicable) driver's name, gross, tare, and load weights, or equal if solids are being conveyed by pipeline instead of truck.

D. A typical example of the Contractor's monthly invoice.

E. Copies of all permits, agreements, approvals and supporting information required for the proposed biosolids handling, hauling, conveying, land application, and disposal.

F. Copies of all permits and approvals required for the proposed handling, hauling, conveying, reuse/disposal methods(s), including but not limited to waste discharge permits and requirements, solid waste facility permits and agreements, conditional land use permits, waste disposal exemptions, permits, or agreements from all federal, state, and local agencies having jurisdiction over biosolids handling and reuse/disposal.

G. Emergency Response and Safety Plan: Site-specific plan that details plans for site safety and emergencies, including route information to the nearest medical facility.

H. Traffic and Haul Route Plan (or Conveyance Plan or equal if conveyance will be by pipeline): Include the proposed biosolids weekly haul/conveyance schedule, a map showing truck haul/pipeline routes, weight scales to be used (or flow meters to be used if liquid biosolids are being pumped and conveyed by pipeline), estimated number of trips, size and capacity of haul vehicles, and a copy of any regulatory permits or approvals for vehicles hauling to each reuse/disposal site.

I. Emergency Biosolids Disposal Plan: Identify the disposal options the Contractor will use in the event that the primary reuse method is interrupted for any reason.

J. Biosolids Spill Response and Prevention Plan: Include spill response, notification, and reporting procedures if wastewater solids are accidentally spilled on-site or off-site such as on public or third-party roadways. The Spill Response and Prevention Plan shall address prevention of spills or leakage, especially during rainstorm events. The Plan shall include the following:

1. Emergency contact information and notification procedures.

2. Personal protective equipment requirements.

3. Response instructions for a spill occurring onsite.

4. Response instructions for a spill occurring during biosolids transport.

5. Description of spill equipment to be maintained in each haul vehicle

6. Response instructions for emergency storage or disposal given a storage or processing facility failure.

7. Response instructions if hazardous or other unauthorized material is found in load.

K. Hazardous Materials Response and Prevention Plan: includes spill response, notification, and reporting procedures if hazardous materials (such as gasoline or diesel fuel) are accidentally spilled on-site or off-site such as on public roadways. The Hazardous Materials Spill Response and Prevention Plan shall address prevention of spills or leakage, especially during rainstorm events. The Plan shall include the following:

8. Emergency contact information and notification procedures.

9. Personal protective equipment requirements.

10. Response instructions for a spill occurring onsite.

11. Fueling and containment protocol for onsite fueling operations.

12. Description of spill equipment to be maintained in each haul vehicle and at job site.

13. Response instructions for emergency storage or disposal.

Odor Control Plan: identifies site-specific procedures that the Contractor shall implement, if required by the District (e.g., leave existing water cap on Sludge Storage Pond while dredging that pond), for reducing and controlling odors associated with biosolids handling and land application and disposal. Contractor must include and have onsite an iron salt injection system to control hydrogen sulfide odors produced during dredging operations.

PART 4 PAYMENT

4.01 GENERAL

A. Full compensation for the work specified herein shall be considered as included in the applicable lump sum or unit price items stated in the Contactor's proposal and no additional compensation will be allowed therefor.

END OF SECTION

SECTION 01 33 00

SUBMITTALS

PART 1 GENERAL

1.01 SECTION INCLUDES

A. Requirements and procedures necessary for scheduling, preparation, and submission of submittals.

B. Requirements for preparation of progress schedules.

1.02 RELATED WORK SPECIFIED UNDER OTHER SECTIONS

A. The individual Specification sections in these Contract Documents contain additional and special submittal requirements. Individual sections shall take precedence in the event of a conflict with this section.

1.03 SUBMITTAL PROCEDURES

A. Owner reserves the right to modify the procedures and requirements for submittals, as necessary to accomplish the specific purpose of each submittal.

B. Review, acceptance, or approval of substitutions, schedules, shop drawings, lists of materials, and procedures submitted or requested by Contractor shall not add to the Contract amount, and additional costs which may result therefrom shall be solely the obligation of Contractor.

C. Owner is not precluded, by virtue of review, acceptance, or approval, from obtaining a credit for construction savings resulting from allowed concessions in the work or materials therefor.

D. Owner is not responsible to provide engineering or other services to protect Contractor from additional costs accruing from submittals.

E. Delays caused by the need for resubmittal shall not constitute basis for claim.

F. After checking and verifying all field measurements, make submittals to Owner, in accordance with the schedule of submittals for review.
   1. Submittals shall bear a stamp or specific written indication that Contractor has satisfied its responsibilities under the Contract Documents with respect to the review of the submittal.
   2. Data shown shall be complete with respect to quantities, dimensions, specified performance and design criteria, materials, and similar data to enable Owner to review the information.

G. Check samples, and accompany with specific written indication that Contractor has satisfied requirements under the Contract Documents with respect to review of

submittals, and identify clearly as to material, supplier, pertinent data such as catalog numbers and the intended use.

H. Before submission of each submittal, determine and verify quantities, dimensions, specified performance criteria, installation requirements, materials, catalog numbers, and similar data with respect thereto; review and coordinate each submittal with other submittals, requirements of the work, and the Contract Documents.

I. At the time of each submission, give Owner specific written notice of each variation that the submittal may have from the requirements of the Contract Documents; in addition, make specific notation on each shop drawing submitted to Owner for review and approval of each such variation.

1.04 SCHEDULES

A. General:
1. Submit estimated progress schedule and preliminary schedule of submittals in duplicate to Owner.
2. Schedules shall be submitted a minimum of 5 days prior to the time scheduled for the preconstruction meeting.
3. Revise and resubmit as specified, and identify all changes made from previous schedule submittals.
4. Failure to resubmit a revised schedule when requested may result in the withholding of monthly progress payments.

B. Progress Schedule:
1. The Contractor shall prepare and submit to the Owner, a progress schedule showing the dates on which each part or division of the work is expected to be started and finished.
2. The schedule shall be in the form of a CPM or bar chart, and shall show the complete sequence of construction by activity or stages of work.
3. The schedule shall reflect completion of all work within the specified time.
4. Show product lead time for any item which exceeds 4 weeks.
5. Show sufficient detail in breakdown so no activity exceeds 10 working days, excluding submittals and material lead time.
6. Show the average feet per day anticipated for each condition, area, and/or size of pipe.
7. Indicate the number of crews, the makeup of all crews, and the separate tasks to be preformatted by each crew.
8. Information on the progress schedule shall be maintained current at all times. Submit updated schedule to Owner with each progress pay request.
9. The updated schedule shall clearly show the date of the revision, and the revised performance periods. It shall also have an accurate history of the activities completed.

C. Submittal Listing:
1. Submit listing and schedule for all submittals required by the Specifications for review.

1.05 SHOP DRAWINGS

A. General:

1. Shop drawings, as defined herein, consist of all drawings, diagrams, illustrations, schedules, and other data which are specifically prepared by or for Contractor to illustrate some portion of the work; and all illustrations, brochures, standard schedules, performance charts, instructions, diagrams, and other information prepared by a manufacturer and submitted by Contractor to illustrate material or equipment for Owner portions of the work.
2. Submittal of incomplete or unchecked shop drawings will not be acceptable. Shop drawing submittals which do not clearly show Contractor's review stamp or specific written indication of Contractor review will be returned to Contractor for resubmission.
3. Submittal of shop drawings not required under these Contract Documents and not shown on the schedule of submittals will be returned to Contractor unreviewed and unstamped.

B. Procedures:

1. Submit to Owner for review and approval in accordance with the accepted schedule of submittals, five copies of shop drawings.
2. Transmit each submittal on Owner accepted form.
3. Sequentially number the transmittal forms; resubmittals to have original number with an alphabetic suffix.
4. Identify project, Contractor, Specification section number, pertinent drawing sheet and detail number(s), products, units and assemblies, and the system or equipment identification or tag number as shown.
5. Apply Contractor's stamp, signed or initialed certifying that review, verification of products required, field dimensions, adjacent construction work, and coordination of information, is in accordance with requirements of the Contract Documents.
6. Revise and resubmit submittals as required; identify all changes made since previous submittal.
7. Submittals will be acted upon and transmitted to Contractor not later than 20 working days after receipt.
8. When shop drawings have been reviewed by Owner, two copies will be returned to Contractor appropriately annotated.
    a. If major changes or corrections are necessary, shop drawing may be rejected and one set will be returned to Contractor with such changes or corrections indicated.
    b. Correct and resubmit the shop drawings in the same manner and quantity as specified for the original submittal.

1.06 SAMPLES AND TEST SPECIMENS

A. Where required in the Specifications, and as determined necessary by Owner, submit test specimens or samples of materials, appliances, and fittings to be used or offered for use in connection with the work. Include information as to their sources, prepay cartage charges, and submit such quantities and sizes for proper examination and tests to establish the quality or equality thereof, as applicable.

B. Submit samples and test specimens in ample time to enable Owner to make tests or examinations necessary, without delay to the work.

C. Submit additional samples as required by Owner to ensure equality with the original approved sample and/or for determination of Specification compliance.

D. Laboratory tests and examinations that Owner elects to make in its own laboratory will be made at Owner 's cost except that, if a sample of any material or equipment proposed for use by Contractor fails to meet the Specifications, Contractor shall bear cost of testing subsequent samples.

E. Tests required by the Specifications to be performed by an independent laboratory shall be made by a laboratory licensed or certified in accordance with state statues. Submit certified test results of specified tests in duplicate to Owner.

F. Samples and laboratory services shall be at the expense of Contractor and included in the prices bid for the associated work.

1.07 CONTRACT CLOSEOUT SUBMITTALS

A. Record Drawings:

1. Each month, or as otherwise agreed, submit to Owner a current listing and description of each change incorporated into the work since the preceding submittal. These changes shall be summarized on a full size set of Drawings in pencil or ink on an ongoing basis. Contractor will prepare a set of record drawings for the project which will include the changes made in materials, equipment, locations, and dimensions of the work. Final payment will not be made until a complete set of the annotated Drawings have been delivered to the Owner.

1.08 CONSTRUCTION PHOTOGRAPHS

A. Provide photographs in JPEG showing the preconstruction site conditions, construction progress, and the post-construction site conditions. Each photograph shall be labeled in chronological order, formatted consistently, with easily apparent date and time, location taken, and general subject/title. Deliver to Engineer/Owner the photographs in electronic format saved in a CD, DVD, or USB flash drive.

A. Take exposures of the preconstruction site and the property adjacent to the perimeter of the construction site. Particular emphasis shall be directed to structures both inside and outside the site, or as directed by Owner.

B. Take exposures monthly showing the progress of construction. The location of these photographs shall be determined by Owner.

C. Take exposures of the post-construction site and the property adjacent to the perimeter of the site. Particular emphasis shall be directed to structures both inside and outside the site, or as directed by Owner.

PART 2 PRODUCTS (Not Used)

PART 3 EXECUTION (Not Used)

PART 4 PAYMENT

4.01 GENERAL

A. Full compensation for the work specified herein shall be considered as included in the applicable lump sum or unit price items stated in the Contactor's proposal and no additional compensation will be allowed therefor.

END OF SECTION

SECTION 01 40 00

QUALITY REQUIREMENTS

PART 1 GENERAL

1.01 SECTION INCLUDES

A. Quality control and control of installation.

B. Tolerances

C. References.

D. Testing and inspection services.

E. Examination.

F. Preparation.

1.02 QUALITY CONTROL AND CONTROL OF INSTALLATION

A. Monitor quality control over suppliers, manufacturers, products, services, site conditions, and workmanship, to produce Work of specified quality.

B. Comply with manufacturers' instructions, including each step in sequence.

C. When manufacturers' instructions conflict with Contract Documents, request clarification from Architect/Engineer before proceeding.

D. Comply with specified standards as minimum quality for the Work except where more stringent tolerances, codes, or specified requirements indicate higher standards or more precise workmanship.

E. Perform Work by persons qualified to produce required and specified quality.

F. Verify field measurements are as indicated on Shop Drawings or as instructed by manufacturer.

G. Secure products in place with positive anchorage devices designed and sized to withstand stresses, vibration, physical distortion, or disfigurement.

1.03 TOLERANCES

A. Monitor fabrication and installation tolerance control of products to produce acceptable Work. Do not permit tolerances to accumulate.

B. Comply with manufacturers' tolerances. When manufacturers' tolerances conflict with Contract Documents, request clarification from Architect/Engineer before proceeding.

C. Adjust products to appropriate dimensions; position before securing products in place.

1.04 REFERENCES

A. For products or workmanship specified by association, trade, or other consensus standards, comply with requirements of standard, except when more rigid requirements are specified or are required by applicable codes.

B. Conform to reference standard by date of issue current on date of Contract Documents, except where specific date is established by code.

C. Obtain copies of standards where required by product specification sections.

D. When specified reference standards conflict with Contract Documents, request clarification from Architect/Engineer before proceeding.

E. Neither contractual relationships, duties, nor responsibilities of parties in Contract nor those of Architect/Engineer shall be altered from Contract Documents by mention or inference otherwise in reference documents.

1.05 TESTING AND INSPECTION SERVICES

A. Unless noted otherwise, Contractor will employ and pay for specified services of an independent firm to perform testing and inspection.

B. See Proposal, Bid Item Descriptions, for trench compaction requirements to be certified by a Registered Geotechnical Engineer to be hired by the Contractor.

C. The independent firm will perform tests, inspections and other services specified in individual specification sections and as required by Architect/Engineer.
   1. Laboratory: Authorized to operate at Project location.
   2. Laboratory Staff: Maintain full time specialist on staff to review services.
   3. Testing Equipment: Calibrated at reasonable intervals with devices of an accuracy traceable to National Bureau of Standards or accepted values of natural physical constants.

D. Testing, inspections and source quality control may occur on or off project site. Perform off-site testing as required by Architect/Engineer or Owner.

E. Reports will be submitted by independent firm to Architect/Engineer, indicating observations and results of tests and indicating compliance or non-compliance with Contract Documents.

F. Cooperate with independent firm; furnish samples of materials, design mix, equipment, tools, storage, safe access, and assistance by incidental labor as requested.
   1. Notify Architect/Engineer and independent firm 24 hours prior to expected time for operations requiring services.
   2. Make arrangements with independent firm and pay for additional samples and tests required for Contractor's use.

G. Testing and employment of testing agency or laboratory shall not relieve Contractor of obligation to perform Work in accordance with requirements of Contract Documents.

H. Re-testing or re-inspection required because of non-conformance to specified requirements shall be performed by same independent firm on instructions by Architect/Engineer. Payment for re-testing or re-inspection will be charged to Contractor by deducting testing charges from Contract Sum/Price.

I. Testing Agency Responsibilities:
1. Test samples of mixes submitted by Contractor.
2. Provide qualified personnel at site. Cooperate with Architect/Engineer and Contractor in performance of services.
3. Perform specified sampling and testing of products in accordance with specified standards.
4. Ascertain compliance of materials and mixes with requirements of Contract Documents.
5. Promptly notify Architect/Engineer and Contractor of observed irregularities or non-conformance of Work or products.
6. Perform additional tests required by Architect/Engineer.

J. Testing Agency Reports: After each test, promptly submit two copies of report to Architect/Engineer. When requested by Architect/Engineer, provide interpretation of test results. Include the following:
1. Date issued.
2. Project title and number.
3. Name of inspector.
4. Date and time of sampling or inspection.
5. Identification of product and specifications section.
6. Location in Project.
7. Type of inspection or test.
8. Date of test.
9. Results of tests.

K. Limits On Testing Authority:
1. Agency or laboratory may not release, revoke, alter, or enlarge on requirements of Contract Documents.
2. Agency or laboratory may not approve or accept any portion of the Work.
3. Agency or laboratory may not assume duties of Contractor.
4. Agency or laboratory has no authority to stop the Work.

PART 2 PRODUCTS

Not Used.

PART 3 EXECUTION

3.01 EXAMINATION

A. Verify existing site conditions and substrate surfaces are acceptable for subsequent Work. Beginning new Work means acceptance of existing conditions.

B. Verify existing substrate is capable of structural support or attachment of new Work being applied or attached.

C. Examine and verify specific conditions described in individual specification sections.

D. Verify utility services are available, of correct characteristics, and in correct locations.

3.02 PREPARATION

A. Clean substrate surfaces prior to applying next material or substance.
B. Seal cracks or openings of substrate prior to applying next material or substance.
C. Apply manufacturer required or recommended substrate primer, sealer, or conditioner prior to applying new material or substance in contact or bond.

PART 4 PAYMENT

GENERAL

A. Full compensation for the work specified herein shall be considered as included in the applicable lump sum or unit price items stated in the Contactor's proposal and no additional compensation will be allowed therefor.

END OF SECTION

SECTION 01 50 00

CONSTRUCTION FACILITIES AND TEMPORARY CONTROLS

PART 1 GENERAL

1.01 SECTION INCLUDES

A. Temporary utilities required during construction.

B. Requirements for security and protection of facilities and property.

C. Requirements for traffic regulation and access to the work.

D. Temporary controls for protection of environment.

1.02 TEMPORARY UTILITIES

A. Electric Power:
1. Electric power is not available at the site. Contractor shall make arrangements with PG&E to obtain electrical power as necessary.
2. Temporary electric power installations shall meet construction safety requirements of OSHA, state, and other governing agencies.

B. Water:
1. No potable water is available at the project site. Contractor shall make arrangements and bear all costs for obtaining and transporting potable water to the construction areas. The District can provide Number 3 Water (disinfected, non-potable) for the work and Contractor shall be required to pump water to active sites from the WWTP.

C. Sewage:
1. Provide and maintain sanitary facilities for Contractor's employees and subcontractor's employees that comply with regulations of local and state health departments.
2. Provide chemical toilets of suitable types and maintain them in a sanitary condition at all times, conforming to code requirements and acceptable to the health authorities. They shall be of watertight construction so that no contamination of the area can result from their use. Make arrangements for frequent emptying of toilets.

1.03 EQUIPMENT

A. Registration and Licensing: The Work includes providing equipment and drivers that have the current registration and licensing to transport biosolids. Every driver shall have and maintain a clean driving record. The Work includes that the Contractor's drivers inspect the trailer and load; reposition the load; clean the trailer exterior and tires of all loose wastewater solids; inspect, deploy, and secure the trailer cover prior to hauling a

loaded trailer. It shall be the responsibility of the Contractor's drivers to ensure that the trailer tarp cover is correctly tied down and properly secured on trailers that they transport from the Site. The Work includes coordinating the schedule to remove loaded trailer(s) from the WWTP during the hours specified herein, unless another operating schedule for the Work is approved by the District.

B. Equipment Idling: Idling times shall be minimized either by shutting equipment off when not in use or reducing the maximum idling time to 5 minutes (as required by the California airborne toxics control measure Title 13, Section 2485 of CCR).

1.04 SAFETY REQUIREMENTS

A. The Contractor shall comply with all CAL/OSHA and other agency safety requirements. It shall be the Contractor's sole responsibility to make sure these safety requirements are met and the Contractor shall fully assume all liabilities for any damages and/or injuries resulting from their failure to comply with the safety requirements. Failure on the District's part to stop unsafe practices shall, in no way, relieve the Contractor of their responsibility.

B. The Contractor shall inform all workers, subcontractors, suppliers and other onsite support personnel that the site is a wastewater treatment plant and that raw wastewater and wastewater treatment plant sludges are present at the site. The Contractor shall be responsible for informing all workers, subcontractors, suppliers and all other onsite support personnel of the health and safety hazards associated with working in the treatment facility, around the treatment ponds and equipment and near treatment plant biosolids and for directing them to strictly adhere to the approved methods for safely conducting the work.

C. Project is occurring in dirt fields that are actively being farmed and access roads are used by the public, and the contractor shall take measures to ensure workers at the site and the public are protected from work activities.

D. No work shall proceed until each Contractor worker and subcontractor understands the scope of the work and all safety rules and work procedures to be followed. The Contractor shall not allow a new employee or new subcontractor to begin any work on District projects without a full and proper safety orientation. The Contractor shall take all necessary precautions for the safety of, and shall provide the necessary protection to prevent damage, injury, or loss to the following:

a. All persons at the Site and other persons and organizations who may be affected thereby.

b. All the Work and materials and equipment to be used for the Work as described herein, whether on or off the Site

c. Other property at the Site or adjacent thereto, including trees, shrubs, lawns, walks, pavements, roadways, structures, and utilities not designated for removal, relocation, or replacement in the course of the performance of the Work.

d. The Contractor shall inform all workers that the WWTP site is a wastewater treatment plant and each worker shall review WWTP site safety procedures and shall sign a contractor safety checklist prior to commencement of any work at the treatment plant as required by the District.

1.05 DUST ABATEMENT AND WATERING

A. The Contractor at their expense shall take whatever steps, procedures, or acceptable means required to prevent nuisance dust conditions being caused by its operations. Dust control shall be by sprinkling with potable water, modification of operations, or other means acceptable to the Bay Area Air Quality Management District and to the District.

B. Watering or other dust control measures shall be considered as included in the prices paid for various contract items for work and no separate payment will be made therefore. The application of water for dust control will not be considered as extra work under any circumstances.

1.06 PROJECT APPEARANCE

A. Throughout the construction period, the Contractor shall keep the work site clean and free of all rubbish and debris. The Contractor shall provide for the appropriate off-site disposal of all surplus materials, waste products, and debris and shall make the necessary arrangements for such disposal. Debris may be contained on the project site, but only in approved containers, until it is hauled away and disposed of at an approved disposal site.

B. Full compensation for conforming to the provisions in this section, not otherwise provided for, shall be considered as included in prices paid for the various contract items of work involved and no additional compensation will be allowed therefore.

1.07 RESTORATION OF EXISTING FACILITIES

A. Whenever existing facilities/improvements such as pavements, graveled areas, berms, roads, pavement, signs, curbs, or other improvements, have been damaged by the Contractor's operation, such facilities/improvements shall be restored/repaired to their original conditions immediately or as required by the District. All costs involved in restoring existing facilities/improvements shall be borne by the Contractor and no additional compensation will be allowed.

B. The existing publicly used roads are often accessed by elderly and other vulnerable populations. The Contractor shall pay special attention to restoration of roads used by the public, including usage.

C. The Contractor shall restore the work site including flushing and cleaning all of the District's biosolids handling equipment used for the work and assisting District staff to deploy floating aerators. Contractor shall add screened chips aggregate to the surface of the Biosolids Handling Area and level the surface so that it is free of depressions and high spots. Drainage from the Biosolids Handling Area must flow to Pond S-1 after restoration.

PART 2 PRODUCTS (Not Used)

PART 3 EXECUTION

3.01 TEMPORARY CONSTRUCTION FACILITIES

A. Storage Yards and Buildings:

3. Store combustible materials (paints, solvents, fuels, etc.) in a well-ventilated building remote from other buildings.

3.02 SAFETY AND PROTECTION

A. Examination of Existing Facilities:

1. After the Contract is awarded and before the commencement of work, Contractor and Owner shall make a thorough examination of all existing buildings, structures, and other improvements in the vicinity of the work, as applicable, which might be damaged by construction operations.
2. Periodic examinations of existing buildings, structures, and other improvements in the vicinity of the work shall be made jointly by authorized representatives of the Contractor, Owner, and the affected property owners. The scope of the examination shall include cracks in structures, settlement, leakage, and similar conditions.
3. Records in triplicate of all observations shall be prepared by the Contractor and each copy of every document shall be signed by the authorized representative of the Owner and of the Contractor. Photographs, as requested by the Owner, shall be made by the Contractor and signed in the manner specified above. One signed copy of every document and photograph will be kept on file in the office of the Owner.
4. These records and photographs are intended for use as indisputable evidence in ascertaining whether and to what extent damage occurred as a result of the Contractor's operations, and are for the protection of the adjacent property owners, the Contractor, and the Owner.

B. Safety Requirements:

1. Contractor shall do whatever work is necessary for safety and be solely and completely responsible for conditions of the jobsite, including safety of all persons (including employees) and property during the Contract period. This requirement shall apply continuously and not be limited to normal working hours.
2. Safety provisions shall conform to Federal and State Departments of Labor Occupational Safety and Health Act (OSHA), and other applicable federal, state, county, and local laws, ordinances, codes, requirements set forth herein, and regulations that may be specified in other parts of these Contract Documents. Where these are in conflict, the more stringent requirement shall be followed. Contractor shall become thoroughly familiar with governing safety provisions and shall comply with the obligations set forth therein.
3. Contractor shall develop and maintain for the duration of the Contract, a safety program that will effectively incorporate and implement required safety provisions. Contractor shall appoint a qualified employee who is authorized to supervise and enforce compliance with the safety program.
4. Owner's duty to conduct construction review of the Contractor's performance is not intended to include a review or approval of the adequacy of Contractor's safety supervisor, safety program, or safety measures taken in, on, or near the construction site.
5. As part of safety program, Contractor shall maintain at his office or other well-known place at the jobsite, safety equipment applicable to the work as prescribed by the governing safety authorities, and articles necessary for giving first-aid to the injured. Established procedures for the immediate removal to a hospital or a doctor's care of persons who may be injured on the jobsite.
6. Contractor shall do all work necessary to protect the general public from hazards,

including, but not limited to, surface irregulations or unramped grade changes in pedestrian sidewalk or walkway, and trenches or excavations in roadway. Barricades, lanterns, and proper signs shall be furnished in sufficient amount to safeguard the public and the work.

7. Construct and maintain satisfactory and substantial temporary chain link fencing, solid fencing, railing, barricades or steel plates, as applicable, at all openings, obstructions, or other hazards in streets, sidewalks, floors, roofs, and walkways. Such barriers shall have adequate warning lights as necessary or required for safety.
8. Comply with Owner's safety rules while on Owner property.
9. If death or serious injuries or damages are caused, the accident shall be reported immediately by telephone or messenger to the Owner. In addition, Contractor shall promptly report in writing all accidents whatsoever arising out of, or in connection with, the performance of the work whether on or adjacent to the site, giving full details and statements of witnesses.
10. If claim is made by anyone against Contractor or any subcontractor on account of accident, Contractor shall promptly report the facts in writing, giving full details of the claim.

C. Protection of Work and Property:

1. General:
   a. Contractor shall employ such means and methods necessary to adequately protect public property and property of the Owner against damage. In the event of damage to such property, immediately restore the property to a condition equal to its original condition ad to the satisfaction of the Owner and the owner of said property, and bear all costs therefor.
   b. Protect stored materials, trees and crops, and other items located adjacent to the proposed work. During construction operations, construct and maintain facilities to enable pedestrian access by all property owners to their property at all times. No person shall be cut off from vehicular access to residence or place of business, unless the Contractor has made special arrangement with the affected person.
   c. Protect from damage all trees outside the limits of the work and trees within the limits of the work which are designated on the Drawings to remain undisturbed. No trees, except those specifically shown on the Drawings to be removed, shall be removed without approval of the Owner. Dispose of removed trees in a legal manner off the jobsite.
2. Finished Construction:
   a. Contractor shall assume the responsibility for protection of finished construction and shall repair and restore any and all damage to finished work to its original or better condition.
   b. At such time temporary facilities and utilities are no longer required for the work, notify Owner of intent and schedule for their removal. Remove temporary facilities and utilities from the site as Contractor's property and leave the site in such condition as specified, as shown on the Drawings or as directed by the Engineer.
   c. In unfinished areas, leave the site evenly graded in a condition that will restore original drainage, and with an appearance equal to or better than

original. Existing planted or landscaped areas shall be restored and be left ready for replanting.

3.03 ENVIRONMENTAL CONTROLS

A. General:

1. The Contractor is executing the work shall maintain affected areas within and outside project boundaries free from environmental pollution that would be in violation of federal, state, or local regulations.

B. Water Pollution Control:

1. Comply with laws, rules, and regulations of the State of California and agencies of the United States Government prohibiting the pollution of lakes, wetlands, streams, or river waters from the dumping of refuse, rubbish, or debris.
2. Divert sewage and waste flow, including storm water flow, interfering wastewater treatment plant. Do not cause or permit action to occur which would cause an overflow to an existing waterway. Prior to commencing excavation and construction, obtain Owner's agreement with detailed plans showing procedures intended to handle and dispose of sewage, groundwater, and storm water flow, including dewatering pump discharges.
3. Contractor shall comply with the procedures outlined in the U.S. Environmental Protection Agency manuals entitled "Guidelines for Erosion and Sedimentation Control Planning and Implementation", "Processes, Procedures and Methods to Control Pollution Resulting from All Construction Activity", and "Erosion and Sediment Control-Surface Mining in Eastern United States".
4. The California Regional Water Quality Control Board has the power, derived from the Porter-Cologne Water Quality Control Act, to impose on the Owner up to $10,000 per day (or portion thereof) fine for bypassing of sewage flows to the San Francisco Bay. Contractors shall be responsible for violations of Regional Board requirements caused by their operations. If an overflow to the Bay occurs because of the Contractor's operations or neglect, and fines are levied against the Owner, the fines will be considered direct damages caused by the Contractor which the Owner may recover by retention.

C. Waste Material Disposal:

1. Cleaning and disposal shall comply with local ordinances and pollution control laws. Do not burn or bury rubbish or waste materials on the project site. Do not dispose of volatile wastes such as mineral spirits, oil, chemicals, or paint thinner in storm or sanitary drains. Disposal of wastes into streams or waterways is prohibited. Provide acceptable containers for collection and disposal of waste materials, debris, and rubbish.

D. Air Pollution Control:

1. Trash burning will not be permitted on the construction site.
2. Operations of dumping rock and of carrying waste or excess material away in trucks shall be conducted to cause a minimum of dust. Give unpaved streets, roads, detours, or haul roads used in the construction area a dust-preventive treatment, or periodically water to prevent dust. Strictly adhere to applicable environmental regulations for dust prevention.

3. Sweep work area on daily basis, wet as required to control dust during sweeping operations.

E. Noise Control:

1. Minimize noise by executing work using appropriate construction methods and equipment. Provide acoustical barriers so noise emanating from tools or equipment will not exceed legal noise levels.

PART 4 PAYMENT

4.01 GENERAL

A. No separate measurement or payment will be made for work in this section. Payment shall be included as part of the appropriate lump sum or unit price bid items stated in the Proposal.

B. Payment for furnishing and maintaining the Engineer's field office will be made as part of the lump sum bid amount for mobilization stated in the Proposal. Partial payments will be prorated based on the percent complete of the overall project costs.

END OF SECTION

SECTION 01 60 00

PRODUCT REQUIREMENTS

PART 1 GENERAL

1.01 SECTION INCLUDES

A. Products.

B. Product delivery requirements.

C. Product storage and handling requirements.

D. Product options.

E. Product substitution procedures.

1.02 PRODUCTS

A. Furnish products of qualified manufacturers suitable for intended use. Furnish products of each type by single manufacturer unless specified otherwise.

B. Do not use materials and equipment removed from existing premises, except as specifically permitted by Contract Documents.

C. Furnish interchangeable components from same manufacturer for components being replaced.

1.03 PRODUCT DELIVERY REQUIREMENTS

A. Transport and handle products in accordance with manufacturer's instructions.

B. Promptly inspect shipments to ensure products comply with requirements, quantities are correct, and products are undamaged.

C. Provide equipment and personnel to handle products by methods to prevent soiling, disfigurement, or damage.

1.04 PRODUCT STORAGE AND HANDLING REQUIREMENTS

A. Store and protect products in accordance with manufacturers' instructions.

B. Store with seals and labels intact and legible.

C. Store sensitive products in weather tight, climate controlled, enclosures in an environment favorable to product.

D. For exterior storage of fabricated products, place on sloped supports above ground.

E. Provide off-site storage and protection when site does not permit on-site storage or protection.

F. Cover products subject to deterioration with impervious sheet covering. Provide ventilation to prevent condensation and degradation of products.

G. Store loose granular materials on solid flat surfaces in well-drained area. Prevent mixing with foreign matter.

H. Provide equipment and personnel to store products by methods to prevent soiling, disfigurement, or damage.

I. Arrange storage of products to permit access for inspection. Periodically inspect to verify products are undamaged and are maintained in acceptable condition.

1.05 PRODUCT OPTIONS

A. Products Specified by Naming One or More Manufacturers with Provision for Substitutions: Submit request for substitution for any manufacturer not named in accordance with the following article.

1.06 PRODUCT SUBSTITUTION PROCEDURES

A. Substitutions may be considered when a product becomes unavailable through no fault of Contractor.

B. Document each request with complete data substantiating compliance of proposed Substitution with Contract Documents.

C. A request constitutes a representation that Contractor:
1. Has investigated proposed product and determined that it meets or exceeds quality level of specified product.
2. Will provide same warranty for Substitution as for specified product.
3. Will coordinate installation and make changes to other Work which may be required for the Work to be complete with no additional cost to Owner.
4. Waives claims for additional costs or time extension which may subsequently become apparent.
5. Will reimburse Owner for review or redesign services associated with re-approval by authorities having jurisdiction.

D. Substitutions will not be considered when they are indicated or implied on Shop Drawing or Product Data submittals, without separate written request, or when acceptance will require revision to Contract Documents.

E. Substitution Submittal Procedure:
1. Submit three copies of request for Substitution for consideration. Limit each request to one proposed Substitution.
2. Submit Shop Drawings, Product Data, and certified test results attesting to proposed product equivalence. Burden of proof is on proposer.
3. Architect/Engineer will notify Contractor in writing of decision to accept or reject request.

PART 2 PRODUCTS

Not Used.

PART 3 EXECUTION

Not Used.

PART 4 PAYMENT

4.01 GENERAL

A. Full compensation for the work specified herein shall be considered as included in the applicable lump sum or unit price items stated in the Contactor's proposal and no additional compensation will be allowed therefor.

END OF SECTION

SECTION 01 70 00

CONTRACT CLOSEOUT

PART 1 GENERAL

1.01 SECTION INCLUDES

A. Procedures to be followed in closing out the Contract.

1.02 FINAL SUBMITTALS

A. No Contract will be finalized until all of the following have been submitted as required in Section SUBMITTALS:
   1. Final shop drawings.
   2. Record drawings.
   3. Manufacturer's certification of proper installation.
   4. Video tapes, construction photographs, including completed project.

B. No Contract will be finalized until all guarantees, bonds, certifications, licenses, and affidavits required for work or equipment as specified are satisfactorily filed with the Owner.

1.03 RELEASE OF LIENS OR CLAIMS

A. No Contract will be finalized until satisfactory evidence of release of liens has been submitted to Owner as required by the General Conditions.

PART 2 PRODUCTS (Not Used)

PART 3 EXECUTION

3.01 FINAL CLEANING

A. At completion of work and immediately prior to final inspection, clean entire project according to the following provisions:
   1. Leave the structures and site in a complete and finished condition to the satisfaction of the Owner.
   2. Remove debris including dirt, sand, and gravel from sewers.

B. The Contractor shall:
   1. Repair, patch, and touch up marred surfaces to specified finish, and match adjacent surfaces.
   2. Broom clean paved surfaces; rake clean other surfaces.
   3. Remove temporary structures and materials, equipment, and appurtenances not required as part of, or appurtenant to, the completed work.
   4. Leave water courses, gutters, and ditches open and in condition satisfactory to Owner.

3.02 FINAL INSPECTION

A. After final cleaning and upon written notice from the Contractor that the work is completed, Owner will make preliminary inspection with the Contractor present. Upon completion of preliminary inspection, Owner will notify Contractor in writing of particulars in which the completed work is defective or incomplete.

B. Upon receiving written notice from Owner, Contractor shall immediately undertake work required to remedy defects and complete the work to the satisfaction of Owner.

C. After the items as listed in Owner's written notice are corrected or completed, inform Owner in writing that required work has been completed. Upon receipt of this notice, Owner, in the presence the Contractor, will make final inspection of the project.

D. Should the Owner find all work satisfactory at the time of final inspection, Contractor will be allowed to make application for final payment in accordance with provisions of the General Conditions. Should Owner still find deficiencies in the work, Owner will notify Contractor in writing of deficiencies and will not approve Contractor's request for final payment until such time as Contractor has satisfactorily completed the required work.

PART 4 PAYMENT

4.01 GENERAL

A. Full compensation for the work specified herein shall be considered as included in the applicable lump sum or unit price items stated in the Contactor’s Proposal, and no additional compensation will be allowed therefor.

END OF SECTION

SECTION 01 95 00

SAFETY AND HEALTH

PART 1.00 GENERAL

1.01 CONTRACTOR'S RESPONSIBILITY FOR SAFETY

A. The Contractor certifies that he is experienced and qualified to anticipate and meet the safety and health requirements of this Project pursuant to California Administrative Code, Title 8, "Industrial Relations", and Code of Federal Regulations, Sections 1900 through 1910, "Occupational Safety and Health Standards", and Section 1926 "Construction". For information purposes only the Contractor shall submit to the Owner a copy of his Injury and Illness Prevention Program. The Contractor shall be responsible for initiating, maintaining and supervising all safety precautions and programs in connection with the Work. This requirement will apply continuously twenty-four (24) hours a day every day until final acceptance of the Work and shall not be limited to normal working hours. The duties of the Owner, Engineer and Inspector do not include review of the adequacy of the Contractor's safety measures in, on, or about the site and vicinity.

1. Safety Officer. The Contractor shall designate a fully trained and responsible member of his organization at the site who is experienced in administering, enforcing and overseeing the safety standards contained in the California Administrative Code, Title 8 and 29, and the Code of Federal Regulations, Sections 1900 through 1910 and Section 1926, whose duty shall be the prevention of hazards and accidents and who shall have authority to direct work for the Contractor.
2. Safety Supervisor. The Contractor shall designate Safety Supervisors for each work site. One Safety Supervisor may be the Safety Officer. The other Safety Supervisors shall work for the Safety Officer. Each shall be fully trained for the type of work being performed and shall have authority to direct the Contractor's work.
3. Accident Reporting. Any accident occurring within the premise of the Regional Treatment Plant is to be reported to the Owner.

1.02 SAFETY MEASURES

A. The Contractor shall comply with all laws, ordinances, codes, rules, regulations and lawful orders of any public authority having jurisdiction for the safety of persons or property or to protect them from damage, injury or loss. The Contractor shall maintain copies of all documents mentioned or referenced in this Section readily available at the site until the Work is completed. In the event the Contractor fails to observe any of the necessary safety provisions, the Owner may stop the work and direct the Contractor to comply with the applicable provisions, or may order the necessary work done by others. All impacts, both monetary and time-related, associated with stoppage of the work in order to comply with the Owner's directives pertaining to safety requirements, and all costs of having the necessary work done by others shall be borne by and be the obligation of the Contractor.

1.03 CONFINED SPACE SAFETY

A. The Owner employs a "Permit Required" safety standard for all confined space entries per California General Industrial Safety Orders, Section 5157. Work performed in or about wastewater (sewage) facilities, including but not limited to manholes, pipes, tanks,

basins, and structures, carries with it the high potential for exposure of workers and other persons to hazardous conditions. The Contractor is required to be especially alert to these conditions and employ a "permit required" system for all confined space entries as specified in California General Industrial Safety Orders, Section 5157. These conditions may include, but are not limited to, exposure to hydrogen sulfide, carbon dioxide, methane, carbon monoxide and other gases; exposure to atmospheres containing insufficient oxygen to support human life; exposure to wastewater (sewage) which may contain bacteriological, chemical, and other constituents harmful to humans; working in conditions where engulfment or entrapment of personnel may occur (such as in trench excavations); and working in structures with uneven and slippery surfaces and with difficult and limited access. Many of these environments are classified as "confined spaces" in the Code of Federal Regulations, Sections 1900 through 1910 and Section 1926, the California Administrative Code, Title 8, and the State of California's General Industry Safety Orders. The Contractor shall be fully familiar with, and shall strictly adhere to and comply with, the applicable sections of these documents pertaining to confined spaces. In the event of a conflict between applicable requirements, the more restrictive shall apply.

B. See Appendix Section of the Contract Documents for District Safe Work Requirements and Confined Space Entry Program.

1.04 PERSONAL HYGIENE

A. Persons involved in the work may be exposed to disease-producing organisms in wastewater (sewage). The Contractor shall require his personnel to observe proper hygienic precautions, including washing of hands and other exposed portions of the body with disinfecting soap and water before eating or smoking.

1.05 PUBLIC SAFETY AND CONVENIENCE

A. The Contractor shall conduct his work so as to insure the least possible obstruction to traffic and inconvenience to the general public in the vicinity of the work and to insure the protection of persons and property. No road or street shall be closed to the public except with the permission of the Owner and the proper governmental authority. Fire hydrants on or adjacent to the work shall be accessible to fire-fighting equipment. Temporary provisions shall be made by the Contractor to insure the use of sidewalks, private and public driveways and proper functioning of gutters, sewer inlets, drainage ditches and culverts, irrigation ditches and natural water courses.

1.06 WARNINGS AND BARRICADES

A. The Contractor shall provide and maintain barricades, guards, temporary bridges and walkways, watchmen, night lights and danger signals illuminated from sunset to sunrise, and all other necessary appliances and safeguards to protect the Work, life, property, the public, excavations, equipment, and materials. Barricades shall be of substantial construction and shall be painted such as to increase their visibility at night. Suitable warning signs shall be so placed and illuminated at night as to show in advance where construction, barricades, or detours exist. Guard rails shall be provided for bridges and walkways over or adjoining excavations, shafts, and other openings and locations where injury may occur.

1.07 FIRE PREVENTION

A. The Contractor's Safety Officer shall inspect the entire Work and site, including storage areas, at frequent intervals to verify that fire prevention measures are constantly enforced.

1. Fire Extinguishers and Hoses. The Contractor shall furnish and maintain fully charged fire extinguishers of the appropriate type, supplements with temporary fire hoses wherever an adequate water supply exists, at the places where burning, welding or other operations that may cause a fire are being performed.
2. Flammable, Hazardous or Toxic Materials. Solvents, gasoline, and other hazardous materials may be in the wastewater (sewage), and therefore, the work site may be hazardous to open flame, sparks, or unventilated occupancy. The Contractor shall take measures to assure his personnel observe proper safety precautions when working in these areas. Only a working supply of flammable, hazardous or toxic materials shall be permitted in or on any of the permanent structures and improvements, and shall be removed there from at the end of each day's operations. The Contractor shall store flammable, hazardous or toxic materials and waste separate from the Work and stored materials for the Work in a manner that prevents spontaneous combustion or dispersion, provides the appropriate level of secondary spill containment, and none shall be placed in any sewer or drain piping nor buried on the Owner's property. It is the Contractor's responsibility to request permission 15 days in advance, in writing, to bring hazardous, toxic, or flammable materials to the Owner's work site. The request will specify the type and quantity of material proposed to be brought on site, where and how it will be stored, what type of secondary containment will be used, where and by whom the material will be used, and what health hazards are associated with the proposed material (Material Safety Data Sheet). The Owner will respond to the Contractor, in writing, within seven days of the receipt of the request as to whether or not the material can be brought on site and of any special requirements the OWNER may have that are not covered in the Contractor's request. The Contractor shall maintain a current and up-to-date copy of all laws, ordinances, codes, rules, regulations and lawful orders of any regulatory authority having jurisdiction or control over flammable, hazardous or toxic materials and, at his expense, shall comply with said laws, ordinances, codes, rules, regulations and lawful orders.

1.08 SAFETY HELMETS, CLOTHING, AND EQUIPMENT

A. The Contractor shall not permit any person for whom he is responsible or liable to enter or remain on the site of the Work unless the person is equipped with and wearing a safety helmet and other protective clothing and safety equipment conforming to the requirements of California General Industrial Safety Orders, and shall discharge from the site all persons not so equipped. The Contractor shall post conspicuous signs at appropriate locations warning the public and persons engaged upon the Work of this requirement.

1.09 HAZARDOUS AREAS

A. The Contractor shall not permit or allow any person or persons to enter any pipe or space containing hazardous or noxious substances or gases, or where there is an insufficient amount of oxygen to sustain life and consciousness, or any other hazardous area unless equipped with lawful and appropriate safety equipment and life supporting apparatus, and unless those entering are continually monitored and guarded by and in communication

with other persons outside the space or area who are equipped in the same way, can give an alarm to others for assistance, and initiate immediate rescue operations in the event of mishap.

1.10 EMERGENCIES

A. Work During an Emergency. The Contractor shall perform any and all operations and shall furnish any materials and equipment necessary during an emergency endangering life or property and, in all cases, shall notify the Owner of the emergency as soon as practicable, but shall not wait for instruction before proceeding to properly protect both life and property. Any additional compensation or extension of Contract Time claimed by the Contractor on account of an emergency shall be applied for as provided in contract documents.
B. Representatives for Emergencies. The Contractor shall file with the Owner a written list giving the names, addresses, and telephone numbers of at least two of his representatives who can be contacted at any time in case of emergency. The representatives shall be fully authorized and equipped to correct unsafe or inconvenient conditions on short notice. The Contractor shall promptly notify the Owner of all changes in the listing.

1.11 SUBMITTALS

A. Prior to receiving Notice to Proceed, the Contractor shall submit to the District Project Manager the following: (1) a copy of his Injury and Illness Prevention Program Manual, (2) a list of safety equipment he will maintain on site, (3) the name of his Safety Officer and Safety Supervisor(s) who will be responsible for maintaining safety at each work site, and (4) a description of any job-specific measures he will be using which are not contained in his manual. The Owner shall not review these materials, but shall maintain these materials for record purposes.

1.12 IMPLEMENTATION

A. It is the Contractor's responsibility to follow his own safety program and provide one or more designated Safety Supervisor(s) at each work site.

1.13 COMMUNICATION

A. It is the Contractor's responsibility to communicate to the Owner all hazards which they plan to introduce to the work site, whether by procedure or material.

PART 3.00 EXECUTION (Not Used)

PART 4.00 PAYMENT

4.01 GENERAL

Full compensation for the work specified herein shall be considered as included in the applicable lump sum or unit price items stated in the Contactor’s proposal and no additional compensation will be allowed therefor.

END OF SECTION

VOLUME 4
FIGURES

THIS PAGE INTENTIONALLY LEFT BLANK

LAS GALLINAS VALLEY SANITARY DISTRICT
BIOSOLIDS LAND APPLICATION SERVICES

The following figures are provided for the preparation of proposals. The Contractor shall field verify as-built conditions for the performance of the Work for the BIOSOLIDS LAND APPLICATION SERVICES. Any discrepancy between field conditions and information included on the figures shall be brought to the Owner's attention for resolution.

FIGURE NO.	TITLE
1	Site Plan and Parcel Locations
2	Land Application Site

THIS PAGE INTENTIONALLY LEFT BLANK

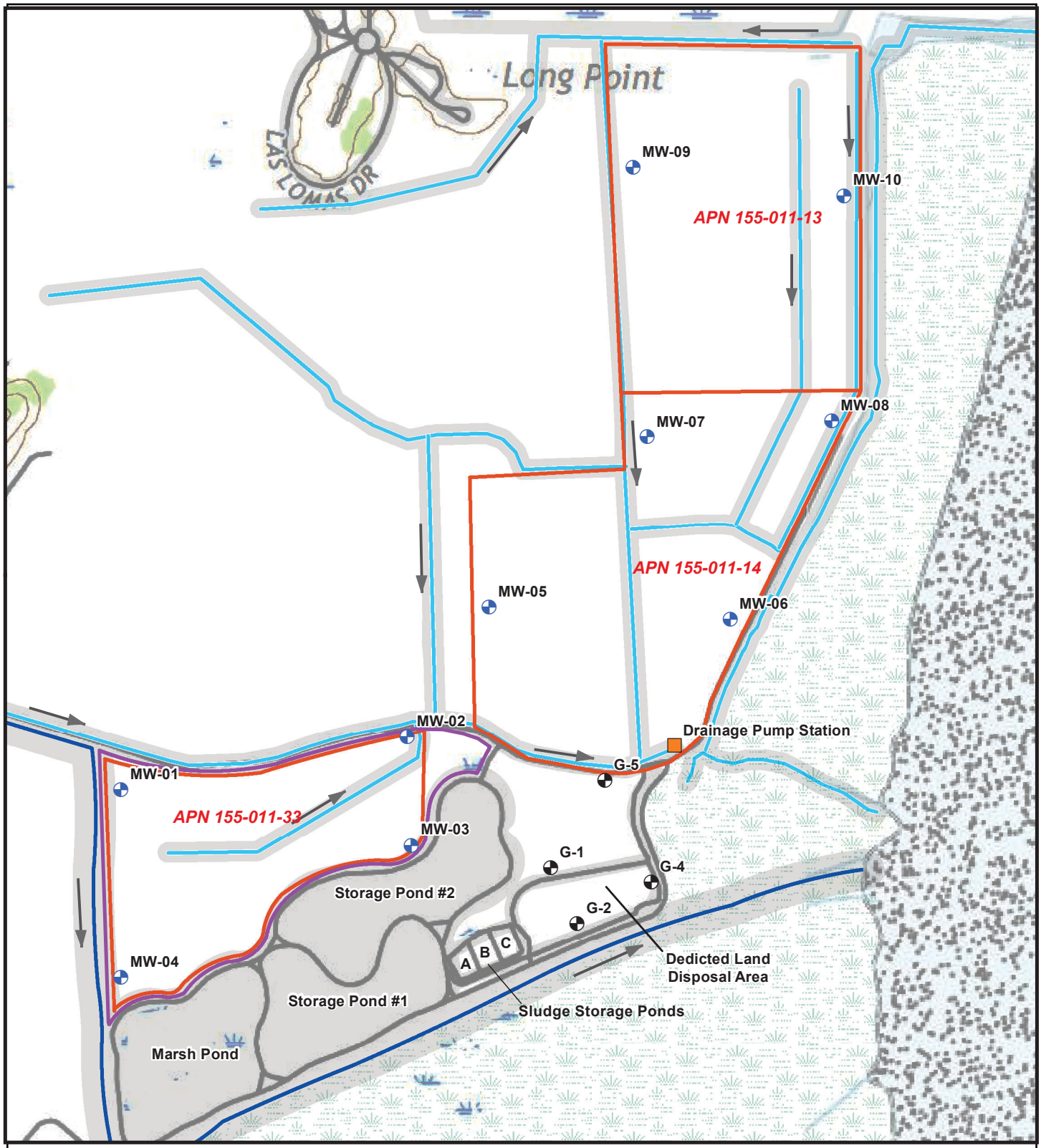

Data Disclaimer

** Mapping Completed by Roux 7/27/21

Legend

- PROPOSED GROUNDWATER MONITORING WELL
- EXISTING MONITORING WELLS
- DRAINAGE PUMP STATION
- MILLER CREEK
- WATER FEATURE
- ELEVATED ROADWAY/ TRAIL
- DRAINAGE FLOW DIRECTION
- SITE BOUNDARY
- BUFFER ZONE

500 0 500'

N

Las Gallinas VALLEY SANITARY DISTRICT

BIOSOLIDS
LAND APPLICATION SERVICES

Site Plan

Date 07/10/2023

FIGURE 1

500 0 500'

N

Las Gallinas VALLEY SANITARY DISTRICT

BIOSOLIDS
LAND APPLICATION SERVICES

Land Application SIte

Date 07/10/2023

FIGURE 2